TM-225
2nd printing

STAR WARS*

Operators Manual with Illustrated Parts Lists

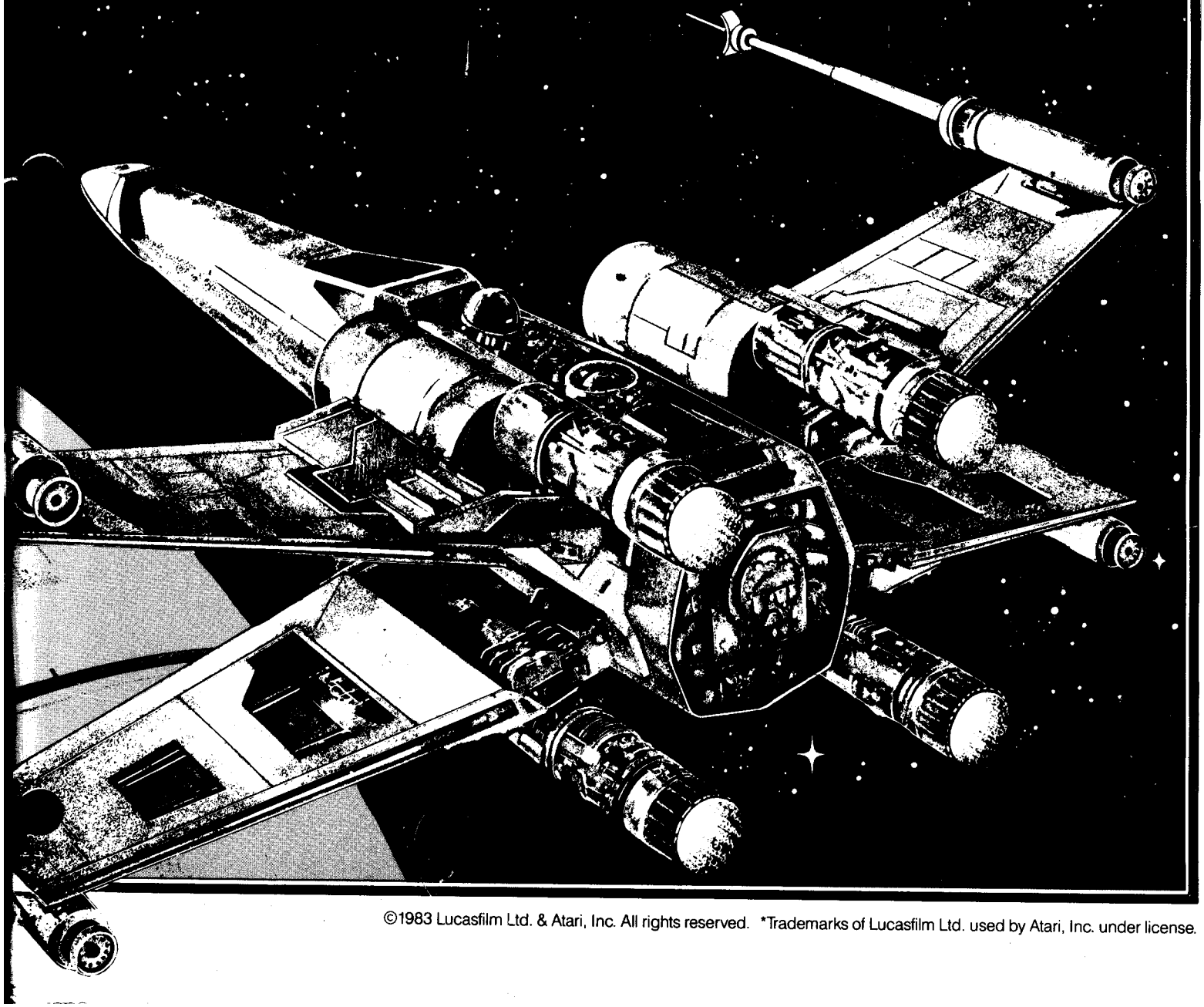

©1983 Lucasfilm Ltd. & Atari, Inc. All rights reserved. *Trademarks of Lucasfilm Ltd. used by Atari, Inc. under license.

If reading through this manual does not lead to solving a certain maintenance problem, call TELEHELP® at the Atari Customer Service office in your geographical area, as shown below.

WEST and CENTRAL U.S.A.

Parts and Service

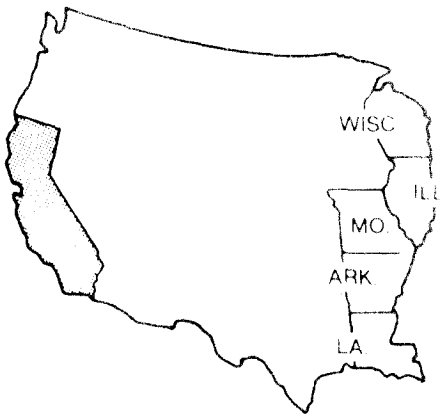

Atari, Inc.
California Customer Service Office
1105 N. Fair Oaks Avenue
P. O. Box 427, Sunnyvale, CA 94086
Telex 17-1103
(Monday–Friday, 7:30–4:00 pm Pacific Time)

☎ From California, Alaska, or Hawaii
(408) 745-2900

☎ Service from anywhere in the area shown in white
toll-free (800) 538-1611

EAST U.S.A.

Service only

Atari, Inc.
New Jersey Customer Service Office
12A World's Fair Drive, Somerset, NJ 08873
Telex 37-9347
(Monday–Friday, 7:30–4:00 pm Eastern time)

☎ From New Jersey
(201) 469-5993

☎ From anywhere else in this area
toll-free (800) 526-3849

EUROPE

Parts and Service

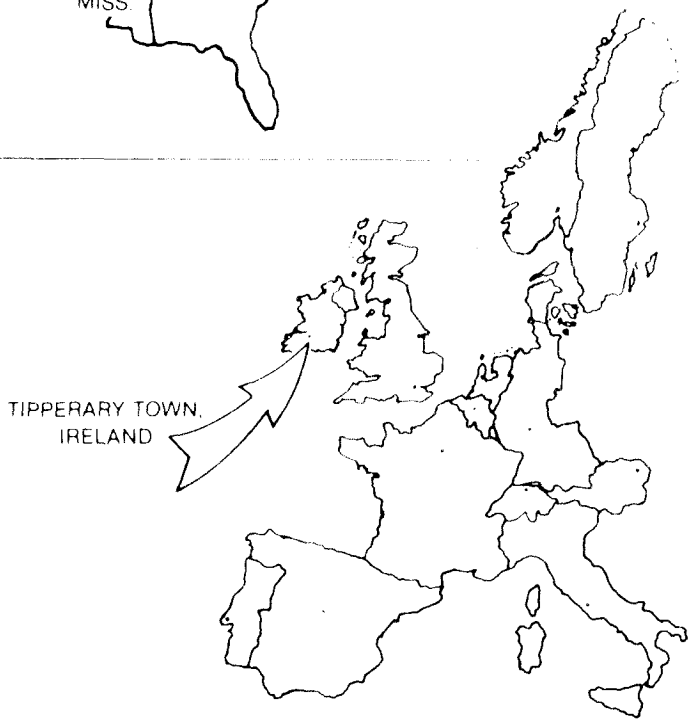

Atari Ireland Limited
European Customer Service Office
Tipperary Town, Ireland
Telex 28-165
(Monday–Friday, 9:00–6:00 pm GMT)

☎ 062-52155

STAR WARS*

Operators Manual

with Illustrated Parts Lists

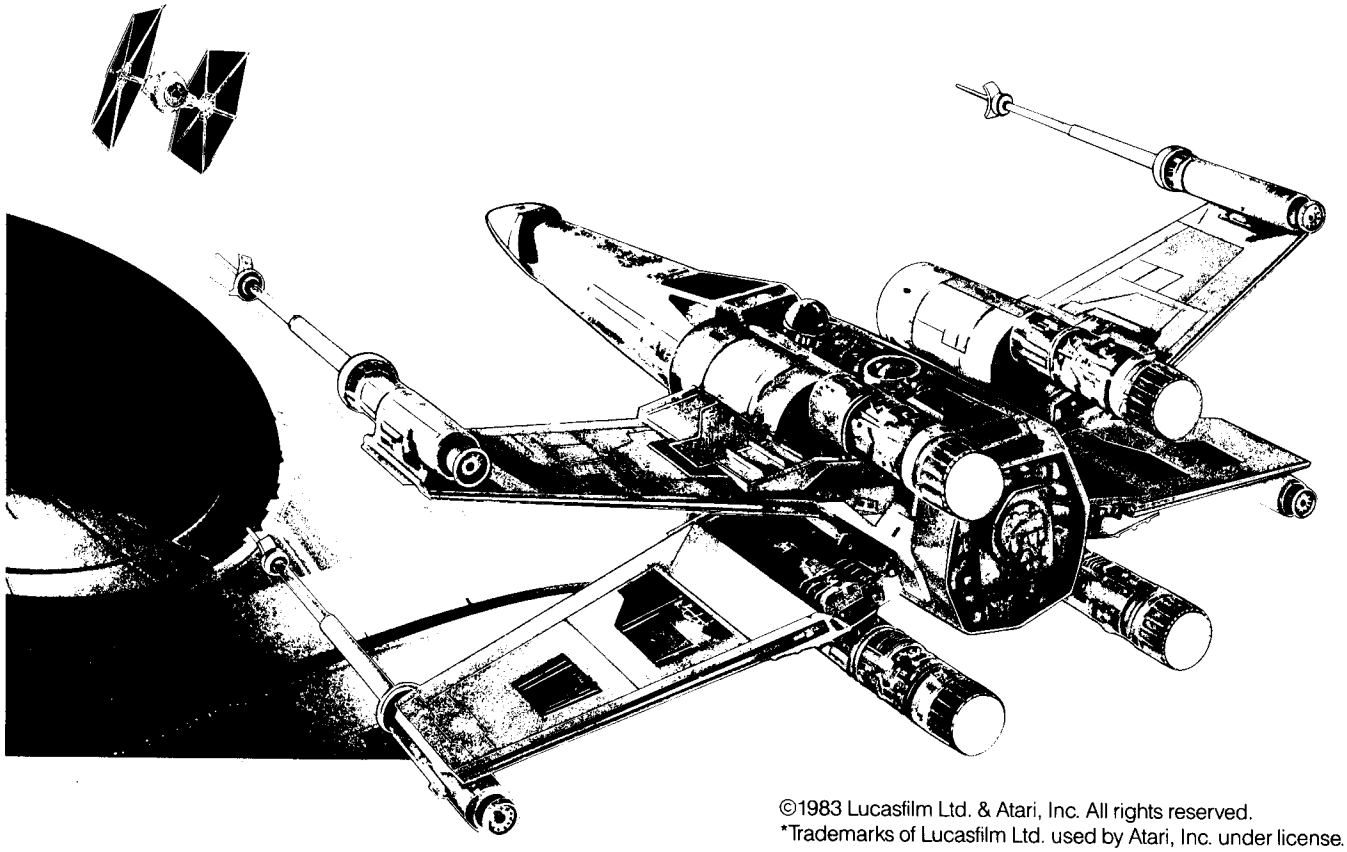

©1983 Lucasfilm Ltd. & Atari, Inc. All rights reserved.
*Trademarks of Lucasfilm Ltd. used by Atari, Inc. under license.

No part of this publication may be reproduced by any mechanical, photographic, or electronic process, or in the form of a phonographic recording, nor may it be stored in a retrieval system, transmitted, or otherwise copied for public or private use, without permission from the publisher.

The game play, all graphic designs, this technical manual, its accompanying schematic diagrams, and the display manual are protected by the U.S. Copyright Act of 1976.

This Act provides for increased penalties for violating federal copyright laws. Courts *can impound* infringing articles while legal action is pending. If infringers are convicted, courts can *order destruction* of the infringing articles.

In addition, the Act provides for payment of statutory damages of up to $250,000 in certain cases. Infringers may also have to pay costs and attorneys' fees and face an imprisonment of up to five years.

Atari will aggressively enforce its copyrights against any infringers. *We will use all legal means* to immediately halt any manufacture, distribution, or operation of a copy of video games made by us. Anyone who purchases such copies risks forfeiting such a game.

Published by: ATARI, INC.
790 Sycamore Drive
P.O. Box 906
Milpitas, California 95035

Printed in the U.S.A. **8M**

Notice Regarding Non-ATARI Parts

WARNING

Use of non-ATARI parts or modifications of any ATARI® game circuitry may adversely affect the safety of your game, and may cause injury to you and your players.

You may void the game warranty (printed on the inside back cover of this manual) if you do any of the following:

- Substitute non-ATARI parts in the game.
- Modify or alter any circuits in the game by using kits or parts *not* supplied by Atari.

NOTE

This equipment generates, uses, and can radiate radio frequency energy and if not installed and used in accordance with the instruction manual, may cause interference to radio communications. It has been tested and found to comply with the limits for a Class A computing device pursuant to Subpart J of Part 15 of Federal Communications Commission (FCC) Rules, which are designed to provide reasonable protection against such interference when operated in a commercial environment. Operation of this equipment in a residential area or modification to this equipment is likely to cause interference in which case the user, at his own expense, will be required to take whatever measures may be required to correct the interference. If you suspect interference from an ATARI® game at your location, check the following:

- All green ground wires in the game are properly connected as shown in the game wiring diagram.
- The power cord is properly plugged into a grounded three-wire outlet.
- The game printed-circuit boards (PCB) are properly installed within the Electromagnetic Interference (EMI) cage.
- The EMI Shield PCB is properly installed and connected in series with the game PCB harness.
- All filter capacitors required on the EMI Shield PCB are properly soldered in place.

If you are still unable to solve the interference problem, please contact ATARI Customer Service. See the inside front cover of this manual for service in your area.

Table of Contents

1 Set Up

How to Use This Manual 1-1
Game Overview 1-3
Installation Specifications 1-3
Inspecting the Game 1-3
Voltage-Plug Selection and Fuses 1-4
Flight Control Calibration 1-5
Switch Locations 1-5
Selecting the Game Options 1-6
Game Play 1-8
Attract Mode 1-8
Selecting-a-Death Star Mode 1-9
Play Mode 1-10
High-Score Mode 1-11
Self-Test Mode 1-11

2 Self Test

Self-Test Displays 2-2

3 Troubleshooting

Troubleshooting Aids 3-2
Troubleshooting Techniques 3-2

4 Maintenance

Cleaning Requirements 4-2
Opening the Control Panel 4-2
Flight Control Maintenance 4-3
Removing the CRT Assembly 4-9
Wiring the Utility Panel Controls 4-10

5 Illustrated Parts Lists

Cabinet-Mounted Assemblies, US-Built Cabinet 5-2
Cabinet-Mounted Assemblies, Ireland-Built Cabinet 5-6
Star Wars Decals, US-Built Cabinet 5-10
Flight Control Assembly 5-12
Fluorescent Tube and Speaker Assembly 5-15
Utility Panel Assembly 5-16
Vertically Mounted Coin-Door 5-18
American-Made Coin-Door 5-21
Power Supply Assembly 5-24
PCB Mounting Hardware, US-Built Cabinet 5-26
PCB Mounting Hardware, Ireland-Built Cabinet 5-28
EMI Shield PCB Assembly 5-30
Regulator/Audio II PCB Assembly 5-32
Main PCB Assembly 5-35
Analog Vector-Generator (AVG) PCB Assembly 5-40
Sound PCB Assembly 5-45

Glossary

List of Illustrations

Figure 1-1	Game Overview	1-2
Figure 1-2	Voltage-Selection Plug and Fuse Locations	1-4
Figure 1-3	Switch Locations	1-5
Figure 2-1	Accounting and Game Times Display	2-2
Figure 2-2	Game Options Display	2-3
Figure 2-3	Hardware Errors Display—Test Passes	2-3
Figure 2-4	Hardware Errors Display—Test Fails	2-3
Figure 2-5	Switch Test Display	2-5
Figure 2-6	Mathbox Tests Display—Test Passes	2-5
Figure 2-7	Mathbox Tests Display—Test Fails	2-5
Figure 2-8	Crosshatch Pattern Display	2-6
Figure 2-9	Grid Pattern Display	2-6
Figure 2-10	Intensity Test Display	2-7
Figure 2-11	Bipolar Offset Test Display—Test Passes	2-7
Figure 2-12	Bipolar Offset Test Display—Test Fails	2-7
Figure 2-13	Scale Test Linear Display	2-8
Figure 2-14	Scale Test Linear and Binary Display	2-8
Figure 2-15	Raster Screen Display	2-8
Figure 4-1	Handle Assembly	4-5
Figure 4-2	Steering Assembly	4-7
Figure 4-3	Removing the CRT Assembly	4-9
Figure 4-4	Utility Panel Wire Colors	4-10

Illustrated Parts Lists

Figure 5-1A	Cabinet-Mounted Assemblies, US-Built Cabinet	5-2
Figure 5-1B	Cabinet-Mounted Assemblies, Ireland-Built Cabinet	5-6
Figure 5-2	Star Wars Decals	5-10
Figure 5-3	Flight Control Assembly	5-12
Figure 5-4	Fluorescent Tube and Speaker Assembly	5-15
Figure 5-5	Utility Panel Assembly	5-16
Figure 5-6	Vertically Mounted Coin-Door	5-18
Figure 5-7	American-Made Coin-Door	5-21
Figure 5-8	Power Supply Assembly	5-24
Figure 5-9A	PCB Mounting Hardware, US-Built Cabinet	5-26
Figure 5-9B	PCB Mounting Hardware, Ireland-Built Cabinet	5-28
Figure 5-10	EMI Shield PCB Assembly	5-30
Figure 5-11	Regulator/Audio II PCB Assembly	5-32
Figure 5-12	Main PCB Assembly	5-35
Figure 5-13	Analog Vector-Generator (AVG) PCB Assembly	5-40
Figure 5-14	Sound PCB Assembly	5-45

List of Tables

Table 1-1	Installation Requirements	1-3
Table 1-2	Switch Settings for Play Options	1-6
Table 1-3	Switch Settings for Coin and Credit Options	1-7
Table 1-4	Switch-Settings for Special Options	1-7
Table 2-1	Main and AVG PCB Faulty RAM & ROM Locations	2-4

Safety Summary

The following safety precautions apply to all game operators and service personnel. Specific warnings and cautions will be found throughout this manual where they apply.

⚠ WARNINGS ⚠

Properly Ground the Game. Players may receive an electrical shock if this game is not properly grounded! To avoid electrical shock, do not plug in the game until it has been inspected and properly grounded. This game should only be plugged into a grounded 3-wire outlet. If you have only a 2-wire outlet, we recommend you hire a licensed electrician to install a grounded outlet. Players may receive an electrical shock if the control panel is not properly grounded! After servicing any parts on the panel, check that the grounding clip is firmly secured to the metal tab on the inside of the control panel. Only then should you lock up the game.

AC Power Connection. Before connecting the game to the AC power source, verify that the proper voltage-selection plug is installed on the game's power supply.

Disconnect Power During Repairs. To avoid electrical shock, disconnect the game from the AC power source before removing or repairing any part of the game. When removing or repairing the video display, extra precautions must be taken to avoid electical shock because high voltages may exist within the display circuitry and cathode-ray tube (CRT) even after power has been disconnected. Do not touch internal parts of the display with your hands or metal objects! Always discharge the high voltage from the CRT before servicing this area of the game. To discharge the CRT: Attach one end of a large, well-insulated, 20-kV jumper to ground. Momentarily touch the free end of the grounded jumper to the anode by sliding it under the anode cap. Wait two minutes and discharge the anode again.

Use Only ATARI Parts. To maintain the safety integrity of your ATARI game, do not use non-ATARI parts when repairing the game. Use of non-ATARI parts or other modifications to the game circuitry may adversely affect the safety of your game, and injure you or your players.

Handle Fluorescent Tube and CRT With Care. If you drop a fluorescent tube or CRT and it breaks, it may implode! Shattered glass can fly six feet or more from the implosion.

Use the Proper Fuses. To avoid electrical shock, use replacement fuses which are specified in the parts list for this game. Replacement fuses must match those replaced in fuse type, voltage rating, and current rating. In addition, the fuse cover must be in place during game operation.

CAUTION

Properly Attach All Connectors. Make sure that the connectors on each printed-circuit board (PCB) are properly plugged in. Note that they are keyed to fit only one way. If they do not slip on easily, do not force them. A reversed connector may damage your game and void the warranty.

Set-Up Procedures

How to Use This Manual

This manual, written for game operators and service technicians, describes your new Atari game. Wherever information is unique to the Ireland-built game, this symbol appears: ☘

Wherever information is unique to the US-built game, this symbol appears: ★

Chapter 1 contains a game overview, game specifications, inspection procedures, voltage plug and fuse information, switch locations, and option information.

Chapter 2 contains self-test procedures.

Chapter 3 contains troubleshooting procedures.

Chapter 4 contains maintenance and repair procedures.

Chapter 5 contains illustrated parts lists. Notes in this chapter refer you to other places in the manual for more detailed information.

Schematic diagrams of the game circuitry are included as a supplement to this manual.

⚠ WARNING ⚠

Shock Hazard

To avoid electrical shock, do not plug in the game until it has been inspected and properly set up for the line voltage in your area.

Do not touch internal parts of the display with your hands or metal objects!

Chapter 1

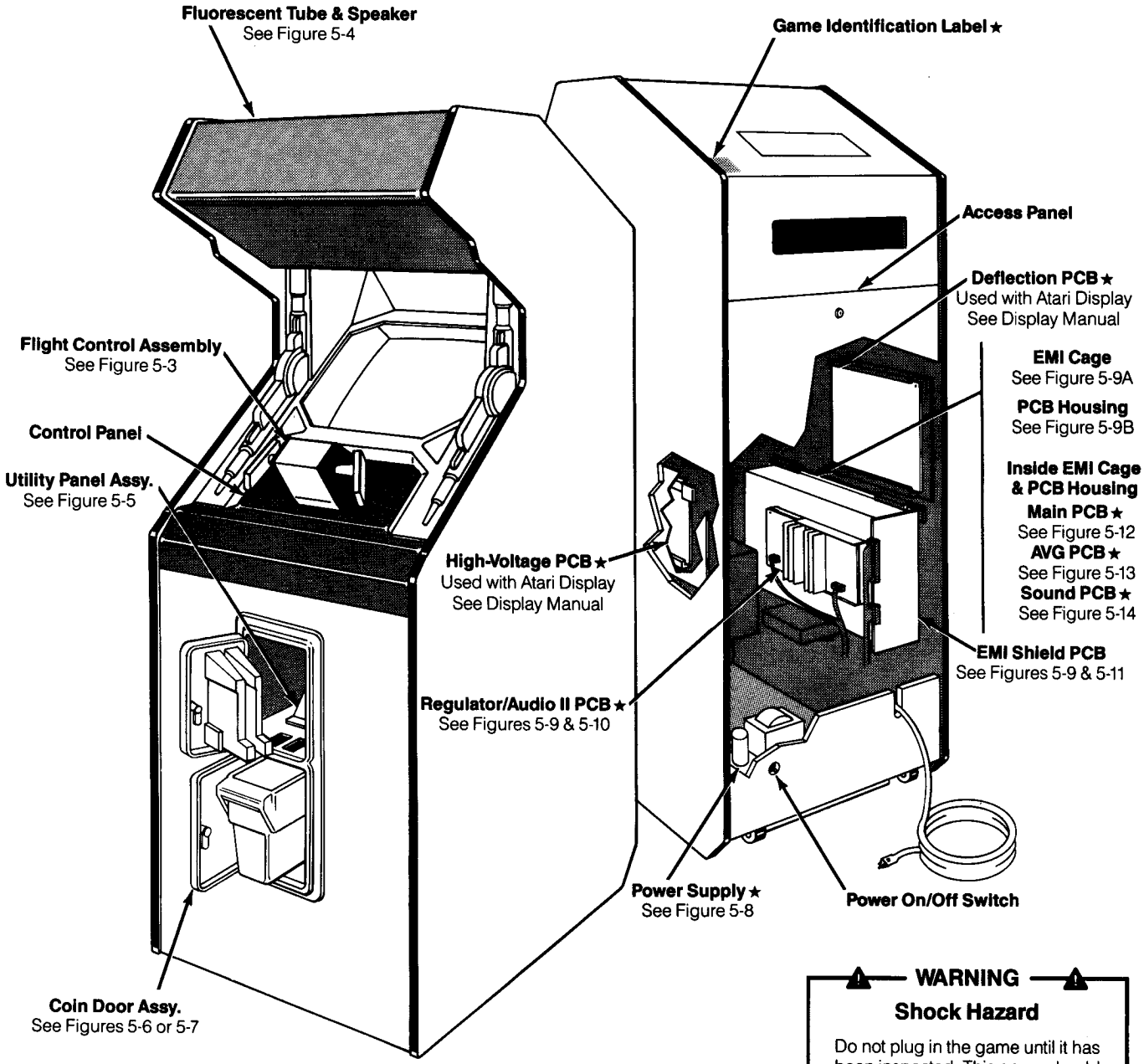

★ Item with a serial number label

WARNING

Shock Hazard

Do not plug in the game until it has been inspected. This game should only be connected to a grounded 3-wire outlet. If you have only a 2-wire outlet, we recommend you hire a licensed electrician to install a grounded outlet. Players may receive an electrical shock if this game is not properly grounded!

Figure 1-1 Game Overview

Game Overview

STAR WARS* is a spectacular video spectacle! STAR WARS is a one-player game, which uses a color X-Y video display. As the player, you'll enter the exciting world of LUKE SKYWALKER* and pilot the RED 5 X-WING* spacecraft to victory over the Empire's evil forces!

New Features

Voice-enhanced game play. The voices you will recognize belong to the actual characters of LUKE SKYWALKER, DARTH VADER*, BEN KENOBI*, HAN SOLO*, and R2-D2*. They intensify the excitement of swift and dynamic game play.

Flight control. The flight control for STAR WARS is a new Atari design. It allows a player to use real flying techniques on a voyage that is out of this world!

Tamper-proof screws. Tamper-proof screws on the cover of the flight control assembly prevent abuse of the control or its handles.

Flight-control wrench. A special wrench for the tamper-proof screws is included with your game. It is located in the coin box.

Medium-speed, medium-resolution, cathode-ray tube. This new X-Y cathode-ray tube (CRT) produces exceptionally clear graphics for the world of LUKE SKYWALKER.

Options display. The Self-Test program of STAR WARS includes an options display that enables you to select game options without having to set the option switches from the back of the cabinet. See Chapter 2 for more details.

All major parts of the STAR WARS cabinet are illustrated in Figure 1-1.

Installation Specifications

Table 1-1 describes the physical, electrical, and environmental specifications of the game.

Table 1-1 Installation Requirements

Characteristic	Requirement
Power Consumption	250 W Nominal
Temperature	0° to +38° C (+32° to +100° F)
Humidity	Not to exceed 95% relative
Line Voltage	100 to 240 VAC
Width	64.1 cm (25.25 in.)
Depth	83.2 cm (32.75 in.)
Height	182.9 cm (72 in.)

* *© 1983 Lucasfilm Ltd. & Atari, Inc. All rights reserved. Lucasfilm trademarks used under license.*

Inspecting the Game

Please inspect your game carefully to ensure that it was delivered to you in good condition.

1. Examine the exterior of the game cabinet for dents, chips, or broken parts.
2. Remove the screws from the rear access panel. Unlock and open this panel and the coin door. Inspect the interior of the game as follows:
   a. Ensure that all plug-in connectors (on the game harnesses) are firmly plugged in. Replug any connectors found unplugged. Do not force connectors together. The connectors are keyed so they only fit in the proper orientation. *A reversed edge connector may damage a printed-circuit board (PCB) and will void your warranty.*
   b. Ensure that all plug-in integrated circuits on each PCB are firmly plugged into their sockets.
   c. Remove the tie-wrap that secures the coiled power cord inside the cabinet. Inspect the power cord for any cuts or dents in the insulation. Repair or replace it as required. Place the square strain-relief plate in the wood slot at the bottom of the rear panel opening.
   d. Inspect the power supply. Make sure the fuse block cover is mounted in place. Check that the green ground wire is connected.
   e. Inspect other major subassemblies, such as the control panel, video display, EMI cage, and each PCB. Make sure they are mounted securely and that the green ground wires are connected.

Voltage-Plug Selection and Fuses

The power supply in your game contains six fuses. When you replace a fuse, use the identical type fuse with the same electrical rating (see Figure 1-2).

This power supply operates on the line voltage of many countries. The power supply comes with either one, two, or three voltage-selection plugs. Plug voltages and wire colors are 100 VAC (violet wire color), 120 VAC (yellow wire color), 220 VAC (blue wire color), and 240 VAC (brown wire color).

See Figure 1-2 for placement of the voltage-selection plug. Before plugging in your game, check your line voltage. Next, check the wire color on the voltage-selection plug. Make sure the voltage-selection plug is correct for the line voltage of your location.

Now plug the game into a **grounded** 3-wire outlet.

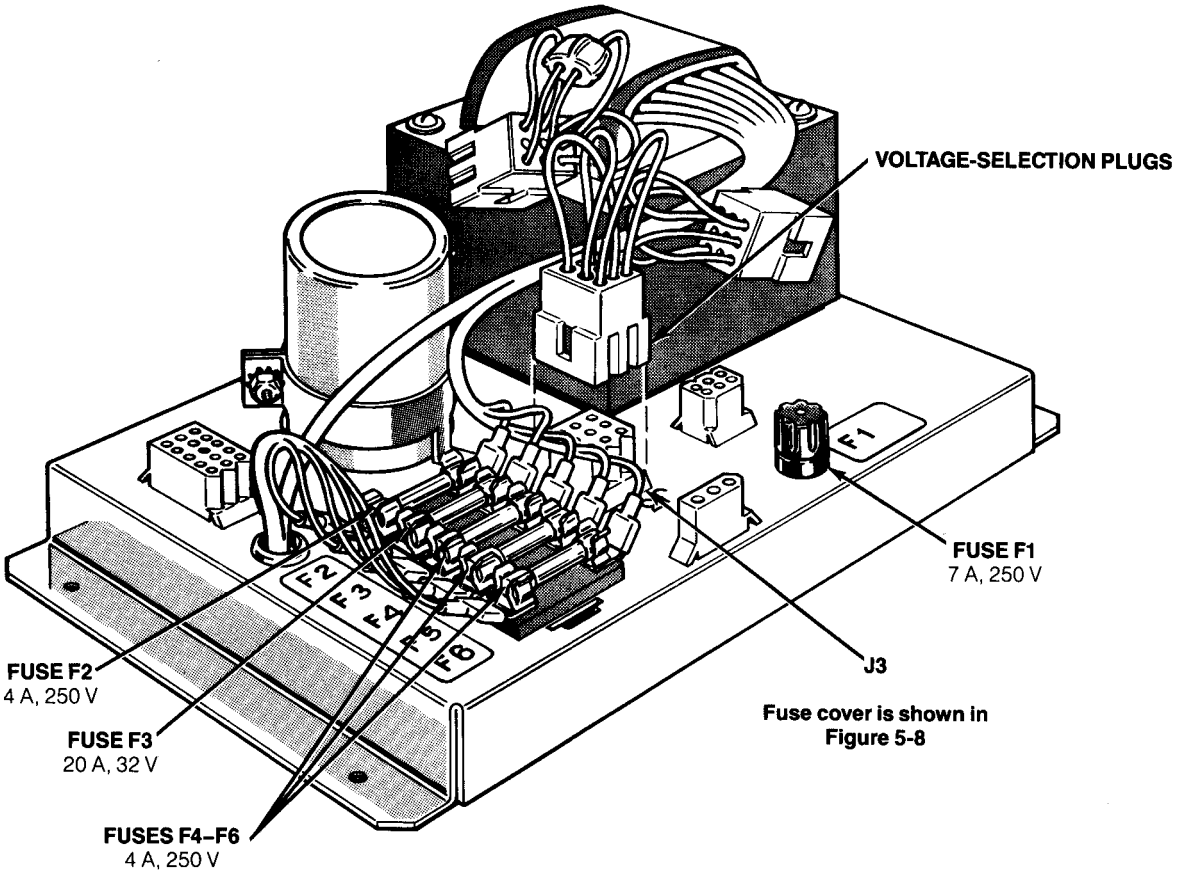

Figure 1-2 Voltage-Selection Plug and Fuse Locations

Flight Control Calibration

The STAR WARS game has a self-calibrating flight control. The game circuitry monitors the position of the cursor on the display in relation to the flight control vertical and horizontal position. Calibration is quickly accomplished by moving the cursor to all four extreme edges of the display. Calibrating is also accomplished during normal game play, but may take a few seconds to optimize.

Switch Locations

Power On/Off Switch

The power on/off switch is located on the back of the cabinet on the lower left side (see Figure 1-1).

Utility Panel Switches

The volume control, coin counter(s), self-test switch, and auxiliary coin switch are on the utility panel. The utility panel is located inside the upper coin door (see Figure 1-1). The volume control adjusts the level of sound produced by the game. The coin counter(s) records the number of coins entered into the game. The self-test switch initiates the self-test mode. The auxiliary coin switch credits the game without activating a coin counter. See Figures 1-3 and 5-5 for details of these switches.

Option Switches

STAR WARS has three option switches. These switches are dual-inline package (DIP) switches located on the Main PCB. The Main PCB is set in the electromagnetic interference (EMI) cage (see Figure 5-9.) Figure 1-3 shows the location of these switches on the Main PCB:

- The option switch at 10D is for selecting play options.
- The option switch at 10E/F is for selecting coin and credit options.
- The option switch at 11L is for selecting special options.

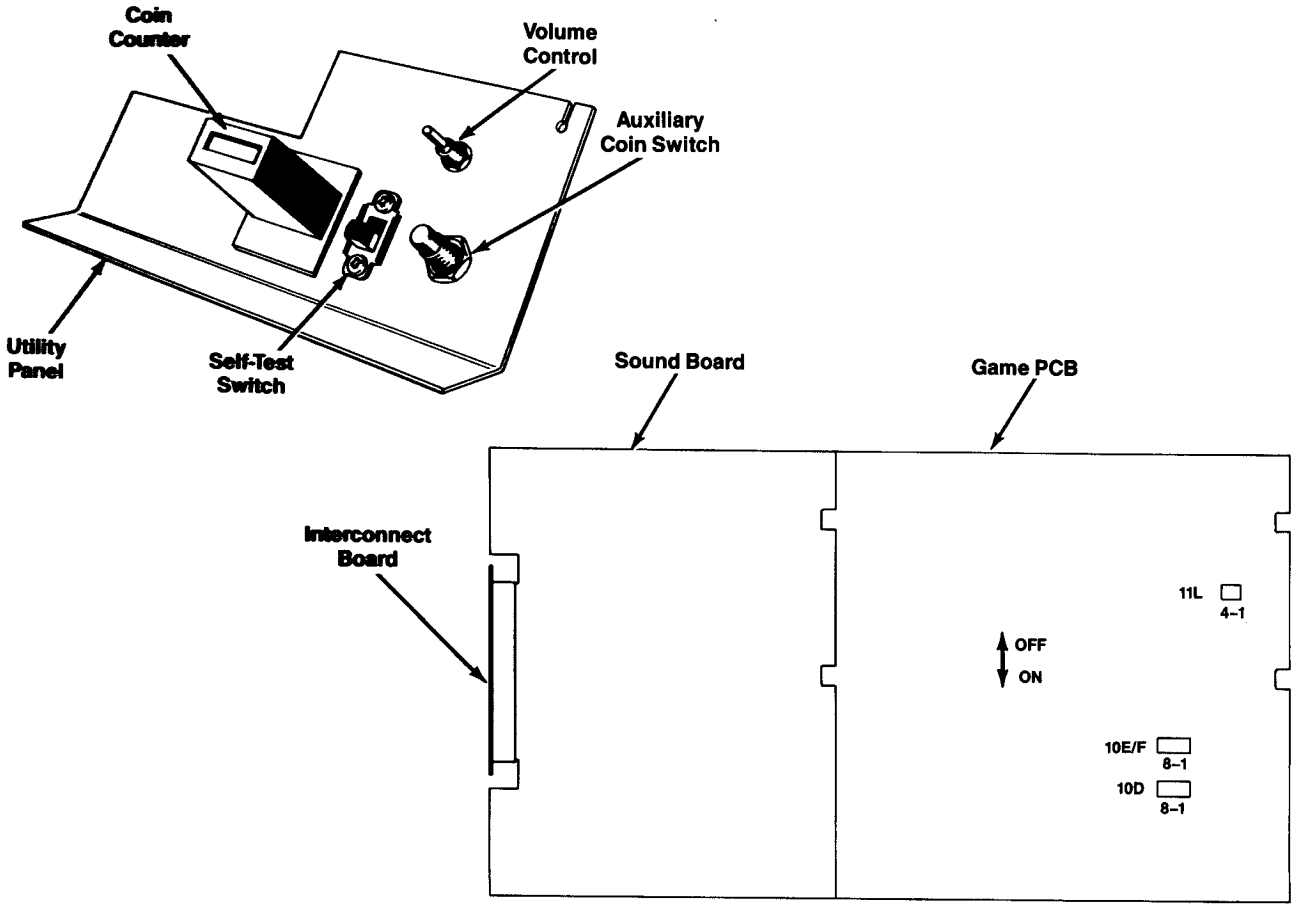

Figure 1-3 Switch Locations

Selecting the Game Options

Settings for option switches are listed in Tables 1-2, 1-3, and 1-4. Options preset at the factory are shown by the ◄ symbol; however, you may change the settings according to your needs.

To verify other option selections, check the self-test display that appears when you turn on the game. Then, verify the option-switch settings on the self-test display as described in Chapter 2.

Important: The Self-Test program of STAR WARS includes an options display that enables you to select game options without having to set the option switches from the back of the cabinet. See Chapter 2 for more details.

Table 1-2 lists settings for the DIP switch at 10D. This switch is used to select play options (such as the number of starting shields per game).

Table 1-3 lists settings for the DIP switch at 10E/F. This switch is used to select coin and credit options available for the left and right coin mechanisms. Table 1-4 lists settings for the DIP switch at 11L. This switch is used to select a special option for the way coin outputs are handled by the game.

The basic unit of measurement is a coin worth $.25 or 1 DM. Thus, if you have a 2 DM/1 DM coin door with two coin counters, set switch 1 at location 11L to OFF. Then, different denominations are counted on the two coin counters.

Table 1-2 Switch Settings for Play Options

Settings of 8-Toggle Switch on Star Wars Game PCB *(at 10D)*								
1	**2**	**3**	**4**	**5**	**6**	**7**	**8**	**Option**
On	On							6 Starting Shields◄
Off	On							7 Starting Shields
On	Off							8 Starting Shields
Off	Off							9 Starting Shields
		On	On					Easy game play
		Off	On					Moderate game play
		On	Off					Hard game play◄
		Off	Off					Hardest game play
				On	On			0 Bonus Shields for Destroying Death Star
				Off	On			1 Bonus Shield for Destroying Death Star◄
				On	Off			2 Bonus Shields for Destroying Death Star
				Off	Off			3 Bonus Shields for Destroying Death Star
						On		Music in the Attract Mode◄
						Off		No Music in the Attract Mode
							On	Freeze Mode
							Off	Normal Game Play Mode◄

◄*Manufacturer's recommended settings*

Table 1-3 Switch Settings for Coin and Credit Options

Settings of 8-Toggle Switch on Star Wars Game PCB *(at 10E/F)*								
1	2	3	4	5	6	7	8	Option
On	On							Free Play
Off	On							2 Credits
On	Off							1 Credit◄
Off	Off							½ Credit
								Left Coin Mechanism
		On						1 Coin◄
		Off						2 Coins
								Right Coin Mechanism
			On	On				1 Coin◄
			Off	On				4 Coins
			On	Off				5 Coins
			Off	Off				6 Coins
								Bonus Coin Adder
					On	On	On	0 Bonus Coins Added◄
					Off	On	On	1 Bonus Coin Added for 2 Coins
					On	Off	On	1 Bonus Coin Added for 4 Coins
					Off	Off	On	2 Bonus Coins Added for 4 Coins
					On	On	Off	1 Bonus Coin Added for 5 Coins
					Off	On	Off	1 Bonus Coin Added for 3 Coins
					On	Off	Off	0 Bonus Coins Added
					Off	Off	Off	0 Bonus Coins Added

Table 1-4 Switch Settings for Special Options

Settings of 4-Toggle Switch on Star Wars Game PCB *(at 11L)*				
1	2	3	4	Option
On	Not used	Not used	Not used	Outputs of coin counter driver 1 and 2 tied together (for 1 counter) ◄
Off				Outputs of coin counter driver 1 and 2 separate (for 2 counters)

◄*Manufacturer's recommended settings*

Game Play

STAR WARS is a one-player game with a color X-Y video display. You command LUKE SKYWALKER's RED 5-X-WING spacecraft with Atari's new flight control. Your main goal is to blow up the DEATH STAR*. To do this, you must reach the thermal exhaust port at the end of the DEATH STAR trench, and fire a proton torpedo into it.

You must survive three phases of play to reach the exhaust port. The first phase of play will engage you in a spectacular battle in space—a war in the stars! TWIN-ION ENGINE (T.I.E.) FIGHTERS* from the DEATH STAR attack you. DARTH VADER's ship appears in this phase—menacing and powerful! Your goal in this phase is to shoot the T.I.E. FIGHTERS and their shots.

The second phase of play takes the X-WING down to the surface of the DEATH STAR which is covered with laser bunkers and laser towers. You must avoid collision with these objects and their shots to keep the number of Deflector Shields above zero. Extra bonus points are earned for exploding all laser tower tops.

The third phase of play takes RED 5 down into the DEATH STAR trench. The walls are lined with red laser-gun turrets that fire at you as you approach. You must counter these shots by avoiding them or by shooting them. Trench catwalks also appear, in varied shapes and altitudes. You must avoid hitting the catwalks, or else your number of deflector shields will decrease.

If you survive the flight down the trench, a message and voice will alert you that the exhaust port is straight ahead. You must shoot the exhaust port to explode the DEATH STAR. If you miss the exhaust port, you will plough through the wall at the end of the trench and lose one deflector shield.

If you succeed in blowing up the DEATH STAR, RED 5 soars away from the DEATH STAR and then turns to view the tremendous explosion. Select-a-Death Star bonus and Remaining Shield Energy bonus are now scored. Depending on the settings of the option switches (see Tables 1-2, 1-3, and 1-4), additional deflector shields will be awarded.

A new DEATH STAR then comes into view. The EMPIRE* is really mad now, and the powers in the EMPIRE want to launch LUKE and the RED 5 into eternity!

STAR WARS has five possible modes of operation: Attract, Select-a-Death Star, Play, High Score, and Self-Test.

* *© 1983 Lucasfilm Ltd. & Atari, Inc. All rights reserved. Lucasfilm trademarks used under license.*

Attract Mode

The Attract Mode begins when power is applied to the game; or when the Play, High-Score, or Self-Test Modes end. The Attract Mode ends either when a credit is entered and the game goes into Select-a-Death Star Mode, or when the self-test switch is turned on.

The first screen displayed in the Attract Mode is the Banner Screen. The *STAR WARS* logo appears with a background of moving stars and then flies away to infinity. As it vanishes, the introductory story line moves into position from the bottom of the screen. The text pauses for about 20 seconds and then, one line at a time, quickly recedes into the distance.

Banner Screen Text:

OBI-WAN KENOBI IS GONE BUT HIS PRESENCE IS FELT WITHIN THE FORCE. THE EMPIRE'S DEATH STAR UNDER THE COMMAND OF DARTH VADER NEARS THE REBEL PLANET. YOU MUST JOIN THE REBELLION TO STOP THE EMPIRE. THE FORCE WILL BE WITH YOU. ALWAYS.

The next screen in the Attract Mode is the Flight Instruction Screen. It outlines RED 5's weaponry, defense system, and mission. The text appears one line at a time, pauses for about 20 seconds, then fades away.

Flight Instruction Screen

FLIGHT INSTRUCTIONS TO RED FIVE
*1. YOUR X-WING IS EQUIPPED WITH AN INVISIBLE DEFLECTOR SHIELD THAT WILL PROTECT YOU FOR x** COLLISIONS.*
2. DEFLECTOR STRENGTH IS LOST WHEN A FIREBALL IMPACTS YOUR SHIELD OR WHEN YOU STRIKE A LASER TOWER OR TRENCH CATWALK.
3. AIM YOUR LASERS WITH CURSOR TO EXPLODE EMPIRE TIE FIGHTERS, LASER TOWER TOPS AND TRENCH TURRETS.
4. SHOOT FIREBALLS BEFORE THEY IMPACT YOUR SHIELD.
5. THE REBEL FORCE IS DEPENDING ON YOU TO STOP THE EMPIRE BY BLOWING UP THE DEATH STAR.

The top part of the Banner Screen should display the last score achieved and the wave number. The messages *INSERT COIN(S)* and *X COINS PER PLAY* should alternately flash if no credit is in the game. If the game has credits, then the message *X CREDITS* and *PULL FIRE TRIGGER TO START* will be displayed. These messages appear on all screens.

The third screen in the Attract Mode is the Scoring Screen. It lists targets in the game and their point values. This screen scrolls up from the bottom of the screen then fades away.

** *Replace x with 6, 7, 8, or 9, depending on option switch settings.*

Scoring Screen

SCORING

TIE FIGHTERS	*1,000*
DARTH VADER SHIP	*2,000*
LASER BUNKERS	*200*
LASER TOWERS	*200*
TRENCH TURRETS	*100*
FIREBALLS	*33*
EXHAUST PORT	*25,000*
DESTROYING ALL TOWER TOPS	*50,000*

The fourth screen in the Attract Mode is the High-Score Screen. It displays a table containing the ten highest scores. At the bottom of the screen the copyright message appears. (The High-Score Screen shown here contains the default entries that will appear if no high scores are in the game's memory.) The game will retain and display the top three scores entered into its memory even if the power is turned off and then on again.

High-Score Screen

PRINCESS LEIA'S REBEL FORCE

1.	*OBI*	*1285353*
2.	*WAN*	*1110936*
3.	*HAN*	*1024650*
4.	*GJR*	*872551*
5.	*MLH*	*813553*
6.	*JED*	*704899*
7.	*NLA*	*518000*
8.	*EJD*	*492159*
9.	*EAR*	*384766*
10.	*RLM*	*380655*

STAR WARS

© 1983 LUCASFILM LTD. AND ATARI, INC.
ALL RIGHTS RESERVED
LUCASFILM TRADEMARKS USED UNDER LICENSE.

You may bring the High-Score Screen or the Flight Instruction Screen into view at any time during the Attract Mode. Moving the flight control to the right displays the High-Score Screen and moving it to the left displays the Flight Intruction Screen.

Select-a-Death Star Mode

The Select-a-Death Star Mode begins when the correct credit(s) is entered and a fire trigger is pulled. You will hear the voice of LUKE saying, "RED 5 standing by," and you'll have 8 seconds to select one of 3 starting DEATH STARS. A DEATH STAR is selected by first maneuvering the flight control until the cursor on the screen is positioned on the desired DEATH STAR and then by pulling the Laser Fire Trigger.

The DEATH STARS are labeled *easy, medium,* and *hard* on the display. The Easy DEATH STAR awards no bonus for completion of the starting level as indicated by *NO BONUS.* The Medium DEATH STAR awards 400,000 points and the Hard DEATH STAR awards 800,000 points. Failure to select a level within the countdown time automatically starts the Play Mode at the Easy level (wave one).

Play Mode

STAR WARS game play is enhanced by 13 special sound effects and by actual character voices communicating with the player.

Voices:

LUKE:	RED 5 standing by.
LUKE:	R2, try and increase the power.
LUKE:	This is RED 5, I'm going in.
LUKE:	I'm hit but not bad, R2 see what you can do with it.
LUKE:	I've lost R2.
LUKE:	I can't shake him!
DARTH:	I'm on the leader.
DARTH:	The FORCE is strong with this one.
DARTH:	I have you now!
DARTH:	Stay in attack formation.
BEN:	Use the FORCE, LUKE.
BEN:	Remember, the FORCE will be with you, always.
BEN:	LUKE, trust me.
BEN:	Let go, LUKE.
HAN:	Yahoo! You're all clear, kid.
HAN:	Great shot kid! That was one in a million.
WEDGE*:	Look at the size of that thing!
R2:	Yes.
R2:	No.
R2:	I agree.
R2:	Sequence completion.
R2:	Ouch!
R2:	That really hurt.

The Play Mode begins in outer space with the DEATH STAR off in the distance. The RED 5 X-WING aiming device (cursor) appears as a crosshair on the screen. As the flight control is moved in any direction, the four laser guns move accordingly. Firing the laser guns will cause alternating laser beams to fire from the guns toward the cursor. In this mode, R2-D2 is controlling the flight pattern of the X-WING based on the flight of attacking T.I.E. FIGHTERS.

Your goal is to blast any and all T.I.E. FIGHTERS and their oncoming shots. If you are hit, your deflector shield will automatically turn on and dissipate the energy from the shot, causing a very bright light to flash on the screen. You will experience a roll in space due to the impact. In a while, the T.I.E. FIGHTERS will turn away from you and fly back to the DEATH STAR.

In the next phase of the Play Mode, the X-WING flies directly toward the DEATH STAR, engines roaring, to a surface covered with hostile laser bunkers and laser towers. Now you, not R2-D2, control the X-WING. Your goal in this phase is to reach the trench. To do this you must avoid or eliminate (by shooting) the structures and the shots fired by them.

The laser tower tops have a progressive scoring incentive that is displayed in a message in the top center of the screen, along with the number of remaining laser tower tops to be destroyed before the X-WING dips into the trench. Eliminating all laser tower tops awards you an added bonus.

Getting hit by a shot or smashing into a laser tower top or laser bunker will roll the X-WING to the right or left as the deflector shield automatically turns on and absorbs impact, displaying a very bright screen. Each collision costs you one deflector shield.

Once you have traveled the required distance over the DEATH STAR surface, the X-WING dips down into the long, deadly trench. In this phase, you can fly right, left, up, or down; but you remain within the trench.

Your main goal while in the trench is to destroy the DEATH STAR by shooting the exhaust port at the end of the trench. You can survive the trench by flying around catwalks, which stretch across the trench at various altitudes, and by avoiding or shooting shots fired from the red laser-gun turrets on the walls. Deflector shield energy is lost if a shot hits you or if you smash into a catwalk. If you successfully reach and shoot the exhaust port, the RED 5 X-WING will soar away from the DEATH STAR and then turn toward it to watch it blow up.

If you miss the exhaust port, you will crash through the back wall and R2-D2 will show his displeasure with you. The X-WING will remain in the trench until the DEATH STAR is destroyed or you run out of deflector shields.

Upon destroying the DEATH STAR, the X-WING returns to another war in the stars with smarter T.I.E. FIGHTERS from a more advanced DEATH STAR. Your ability as a JEDI WARRIOR* will be challenged even more with the destruction of each successive DEATH STAR.

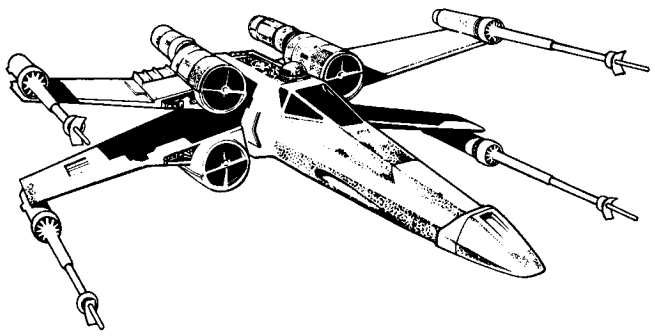

*© 1983 Lucasfilm Ltd. & Atari, Inc. All rights reserved. Lucasfilm trademarks used under license.

Hints for Game Play

- Develop skill for controlling the X-WING with the flight control. It's like flying a plane.
- Blast all the laser tower tops with your laser guns for additional bonus points.
- STAR WARS is a pattern game, so learn the easy levels, and then select a more difficult level.
- The game requires almost constant laser fire during higher levels.

The game ends when you get hit and the deflector shield level is zero. The words *GAME OVER* appear in a very large size as your ship vanishes from the screen.

High-Score Mode

This mode begins with lively music if your score is one of the ten highest scores earned since the game was turned on. A screen appears with the message:

MESSAGE FROM REBEL COMMAND POST
YOU ARE A TRUE REBEL PILOT
THE FORCE IS WITH YOU
SHOOT YOUR INITIALS

Initials surround the high-score table in the middle of the screen. You have 30 seconds to shoot (enter) your initials. The top 3 scores will be saved even with the power off, but the entire high-score table can be reset to its default scores when in the Self-Test Mode.

Self-Test Mode

Self-Test is divided into two sections. The first section shows game statistics and allows the operator to reset certain statistics or change options with the use of the flight control. The second section is designed to allow checking of game switches, hardware failures, potentiometer adjustments, and video display adjustments. Self-Test may be entered any time during the Attract Mode. See Chapter 2 for details.

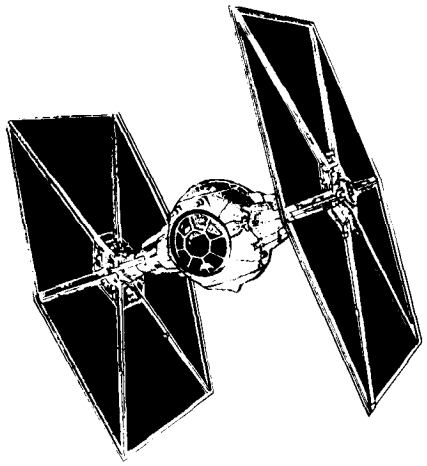

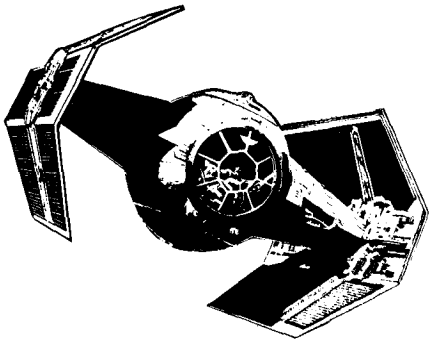

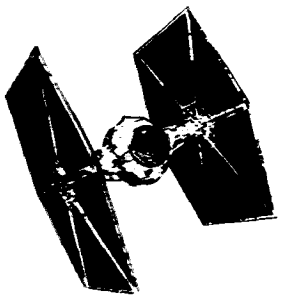

Self-Test Procedure

This game will test itself and provide data to show that the game circuitry and controls are operating properly. Self-test data is presented visually on the video display and audibly through the speakers. No additional equipment is required.

We suggest you perform a self-test when you first set up, each time you collect money, change the game options, or suspect game failure.

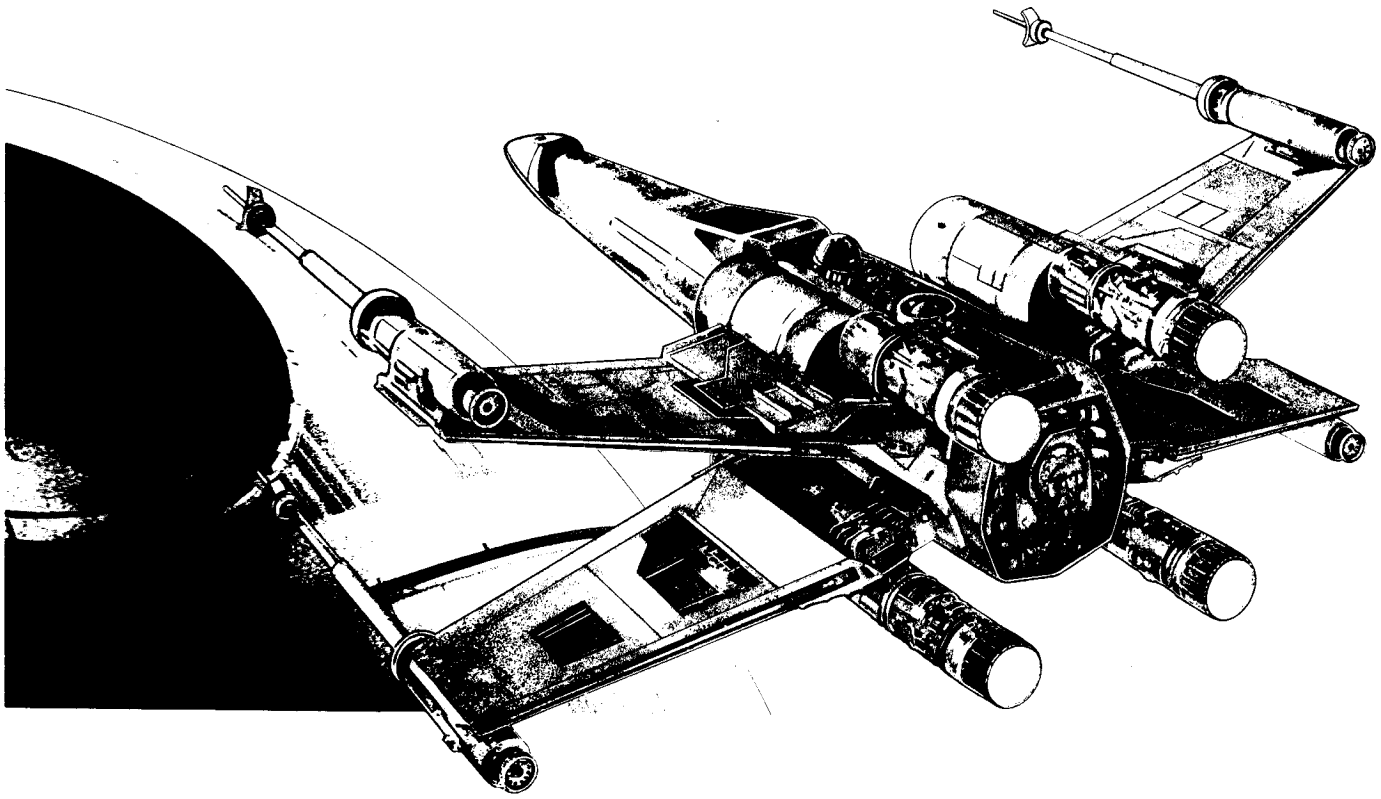

Chapter 2

Self-Test Displays

Fourteen self-test displays provide a visual check of the game statistics, options, switch settings, mathbox circuitry, display circuitry, and the condition of the read-only memory (ROM) and random-access memory (RAM). The first self-test display (Size and Centering) is obtained while in the Attract Mode. When the self-test switch is turned on during the Attract Mode, the game enters the Self-Test Mode. Turning the self-test switch off at any time during the Self-Test Mode causes the game to return to the Attract Mode.

NOTE

Before selecting the Self-Test Mode, perform the following size and centering check with the game in the Attract Mode. The remaining self-test displays are obtained while the game is in the Self-Test Mode.

Size and Centering Display

While the game is in the Attract Mode, verify that a small blue dot is displayed within ¼-inch of the edge in each corner of the screen. If the blue dots are not in the proper position, refer to the X/Y size and centering adjustment procedures included on the Analog Vector-Generator schematic diagrams.

NOTE

The following self-test displays are arranged in the sequence in which they occur after the self-test switch is set to the on position. Press the auxiliary coin switch to end each display and obtain the next display. If the self-test procedures are not performed in sequence, pressing the auxiliary coin switch will advance through the displays until the desired display is obtained. After the last display has ended, the sequence starts over with the Switch Test display. To start with the Accounting and Game Times display, the self-test switch must first be turned off and then on again.

Accounting and Game Times Display

Select the Self-Test Mode by pushing the self-test switch to the up position. The Accounting and Game Times display will appear as shown in Figure 2-1. The totals on this display are those accumulated since the accounting and game times information was last reset. (Refer to Game Options Display for the reset procedure.) The coin accounting information, which is the first four statistics in the Accounting Information section of the display, cannot be reset. They are accumulated from the date the game was manufactured, or since the non-volatile random-access memory (NOVRAM) last failed or was replaced.

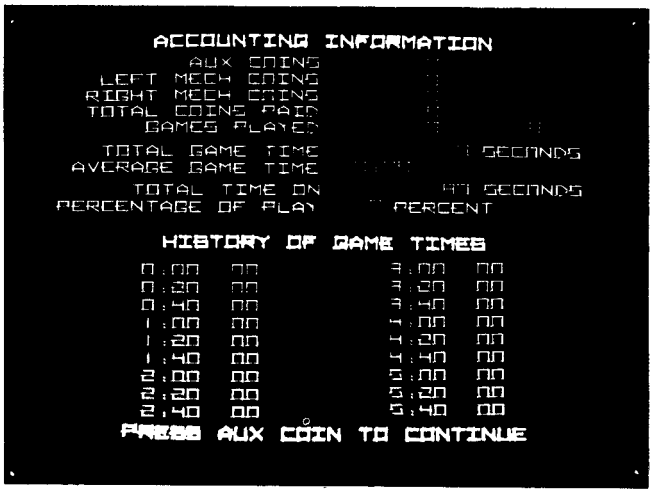

Figure 2-1 Accounting and Game Times Display

- AUXILIARY COINS displays the number of free credits selected by the auxiliary coin switch in the normal play mode.
- LEFT MECH COINS displays the number of coins inserted into the left coin mechanism.
- RIGHT MECH COINS displays the number of coins inserted into the right coin mechanism.
- TOTAL COINS PAID displays the total number of coins inserted into both game coin mechanisms.

NOTE

The following accounting and time information is accumulated since the game was manufactured (or last reset). Refer to Game Options Display for the reset procedure.

- GAMES PLAYED displays the total number of free and paid games played and highest wave achieved.
- TOTAL GAME TIME displays the total time, in seconds, of all the games played.
- AVERAGE GAME TIME displays the average time, in minutes and seconds, of all the games played.
- TOTAL TIME ON displays the total time, in seconds, the game has been on.
- PERCENTAGE OF PLAY displays the percentage of time the game has been in Play Mode (as opposed to Attract Mode).
- HISTORY OF GAME TIMES displays the number of games played that were within each of 18 game-time increments (0 to six minutes in 20- second increments).

Game Options Display

Press the auxiliary coin switch to obtain the Game Options display as shown in Figure 2-2. Use this display to view or change game option settings; reset high scores; reset accounting and game time information; or test the NOVRAM.

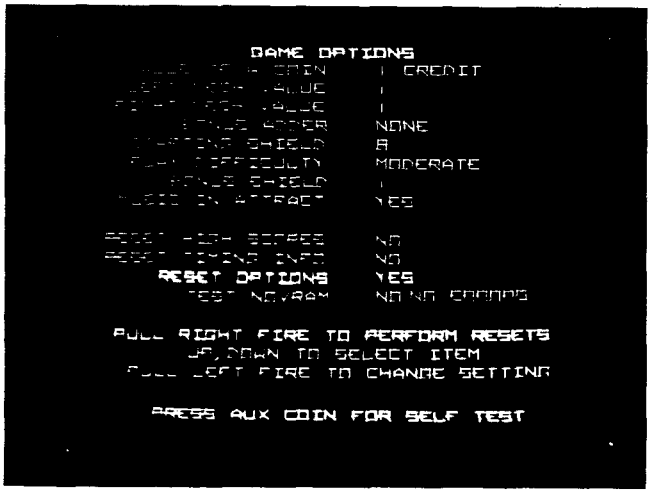

Figure 2-2 Game Options Display

The first section of the Game Options display shows the option settings that have been selected by either the option switches on the Main printed-circuit board (PCB) or by the flight control. The second section of the Game Options display shows the reset and NOVRAM test operations that are selectable with the flight control. Press the auxiliary coin switch to end this display.

Changing the Game Options. Any of the options displayed in the first section of the Game Options display can be changed without setting the option switches on the Main PCB. Select the option to be changed by moving the flight control up or down. Press the left-hand fire trigger to cycle through the available options as indicated in the right-hand column; stop on the desired option setting. The changed option is immediately stored in the NOVRAM and is unaffected by turning off the power or the self-test switch.

The options can also be changed to those selected by the option switches located on the Main PCB (see Chapter 1). If the self-test circuitry malfunctions or the option settings cannot be maintained by the software, the game will default to the hardware switch settings on the Main PCB (refer to Resetting the Options for more details).

Resetting the High Scores. The top ten scores and player initials are displayed in the high-score table during the Attract Mode. All high scores can be reset using the Game Options display. Select *RESET HIGH SCORES* by moving the flight control up or down. Press the left-hand fire trigger and note that *YES* appears in the right-hand column. Then press the right-hand fire trigger to perform the reset operation, which is completed when *NO* appears in the right-hand column.

Resetting the Timing Information. The games played and the timing information in the Accounting and Game Times display (see Figure 2-1) can be reset using the Game Options display. Select *RESET TIMING INFO* by moving the flight control up or down. Press the left-hand fire trigger and note that *YES* appears in the right-hand column. Then press the right-hand fire trigger to perform the reset operation, which is completed when *NO* appears in the right-hand column.

Resetting the Options. The option settings shown on the Game Options display (see Figure 2-1) can be reset (defaulted) to those selected by the option switches located on the Main PCB. Select *RESET OPTIONS* by moving the flight control up or down. Press the left-hand fire trigger and note that *YES* appears in the right-hand column. Then press the right-hand fire trigger to perform the reset operation, which is completed when *NO* appears in the right-hand column.

Testing the NOVRAM. The NOVRAM can be tested using the Game Options display. Select *TEST NOVRAM* by moving the flight control up or down. Press the left-hand trigger and check that *NO ERRORS* appears in the right-hand column. If the NOVRAM is defective, a message *ERROR AT* and a hexadecimal number will appear, which indicates that the NOVRAM should be replaced. Testing the NOVRAM should only be performed if a defective part is suspected because each test decreases the life of the NOVRAM.

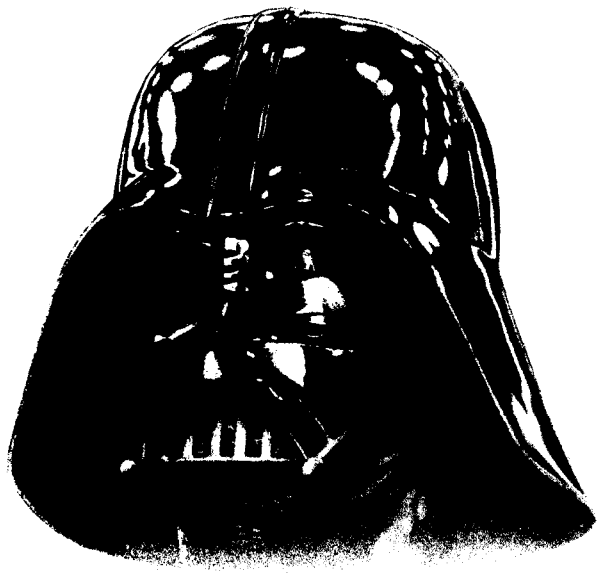

Hardware Errors Display

Press the auxiliary coin switch and wait about seven seconds to obtain the Hardware Errors display as shown in Figure 2-3. This display shows the condition of the game RAM and ROM. If no hardware errors exist, the message *NO ERRORS DETECTED* will be displayed. If there is a RAM or ROM failure, the display will identify the failed component and give its location. See Table 2-1 to determine on which PCB the failed component is located.

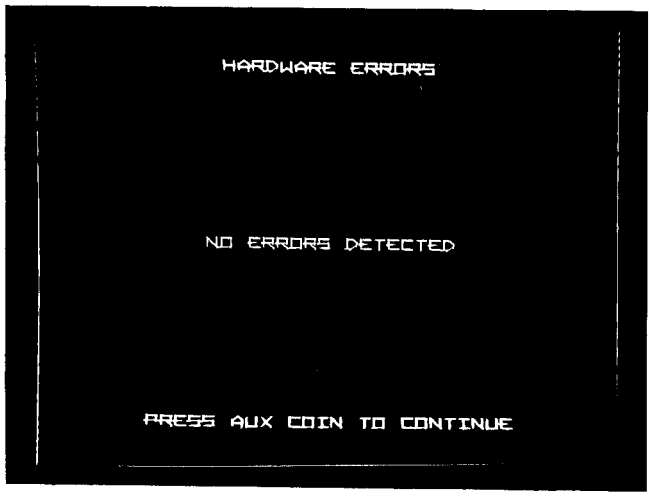

Figure 2-3 Hardware Errors Display–Test Passes

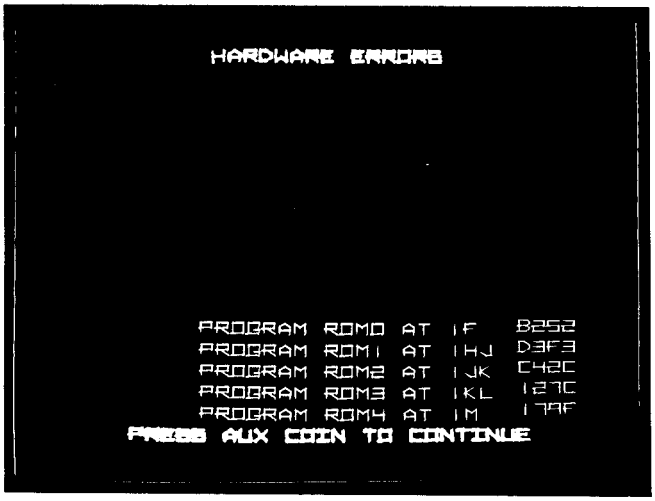

Figure 2-4 Hardware Errors Display–Test Fails

A series of 16 tones will be heard after the Hardware Errors display appears. These tones provide an audible indication of the condition of the program RAM and analog-vector generator that can also be used to locate a faulty RAM or ROM if the display is inoperative or not visible. The series of tones, separated by a short pause, will repeat indefinitely. A high upward-sweeping tone indicates a properly operating RAM or ROM while a downward-sweeping tone indicates a faulty RAM or ROM. Count the tones to determine the location of the faulty RAM or ROM as shown in Table 2-1.

Table 2-1 Main and AVG PCB Faulty RAM and ROM Locations

Tone	Location	Description
1	2F/H (Main)	Program RAM
2	5F (Main)	Matrix Processor RAM 0
3	5H (Main)	Matrix Processor RAM 1
4	3L (AVG)	Vector RAM 0
5	3M (AVG)	Vector RAM 1
6	3P (AVG)	Vector RAM 2
7	4L (AVG)	Vector RAM 3
8	4M (AVG)	Vector RAM 4
9	4P (AVG)	Vector RAM 5
10	1E (Main)	Non-Volatile RAM (RAM portion only)
11	1F (Main)	Program ROM 0
12	1H/J (Main)	Program ROM 1
13	1J/K (Main)	Program ROM 2
14	1K/L (Main)	Program ROM 3
15	1M (Main)	Program ROM 4
16	1L (AVG)	Vector ROM

Switch Test Display

Press the auxiliary coin switch to obtain the Switch Test display shown in Figure 2-5. Perform the following procedure to verify that game switches are operating properly:

1. One at a time, press the fire triggers and thumb pushbuttons. Note that a message appears on the display that indicates which switch was pressed.
2. Actuate the right and left coin mechanisms and note that a message appears that indicates which coin mechanism was actuated.

NOTE

When a game switch is actuated, an upward-sweeping tone occurs which provides an audible indication that can also be used to verify switch operation if the display is inoperative or not visible. However, the tone test does not indicate which switch is actuated.

3. Position the flight control to form a single dot in the center of the smallest box in the *POT TEST* portion of the display.
4. Carefully release the flight control and note that the dot remains centered within the smallest box. If a line forms that extends outside the frame of the smallest box, the flight control potentiometers may be misaligned. Refer to *Aligning the Potentiometers* in Chapter 4 for alignment procedures.
5. Tilt the flight control handles forward and backward; note that a line forms from the center of the smallest box and moves out and back in relation to the handle position. Tilt the handles to the extreme forward and backward position; note that the line extends past the frame of the box with open corners but not beyond the frame of the largest box.
6. Turn the flight control fully clockwise and counterclockwise with the handles at the extreme forward then backward positions. Note that the line travels over a full 360° while not extending outside the area between the largest box and the box with the open corners.
7. Verify that the option settings for the switches at location 10D and 10E/F shown at the bottom center of the display match those selected on the corresponding option switches (F = off, N = on).

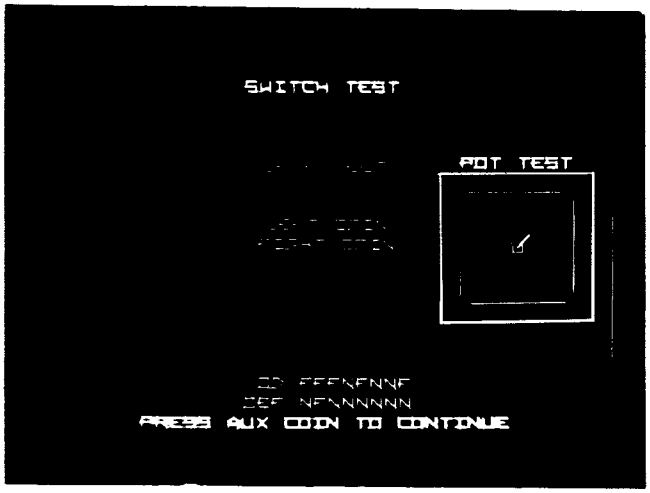

Figure 2-5 Switch Test Display

Mathbox Tests Display

Press the auxiliary coin switch to obtain the Mathbox Tests display shown in Figures 2-6 and 2-7. The first test verifies that the *MATHBOX READY* signal is operating normally. If it is not, the message *BAD MATHBOX READY LINE* appears and no further mathbox tests are performed. If the *MATHBOX READY* signal is correct, then the divider and matrix circuitry should be tested. If no problems exist in the divider or matrix circuitry, the messages *NO DIVIDER ERRORS* and *NO MATRIX ERRORS* are displayed. If divider errors exist, the message *DIVIDER ERRORS* will appear and each error will be indicated with an option-switch setting for the corresponding diagnostic. Also, the numbers used on the test with the expected answer and the incorrect answer received will be displayed for each test in error.

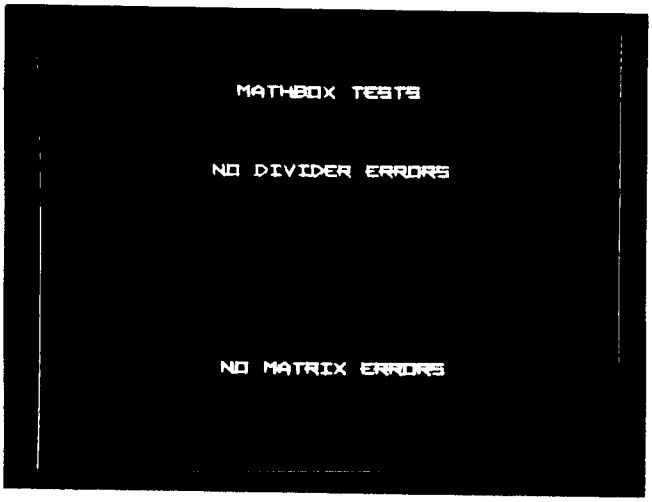

Figure 2-6 Mathbox Test Display—Test Passes

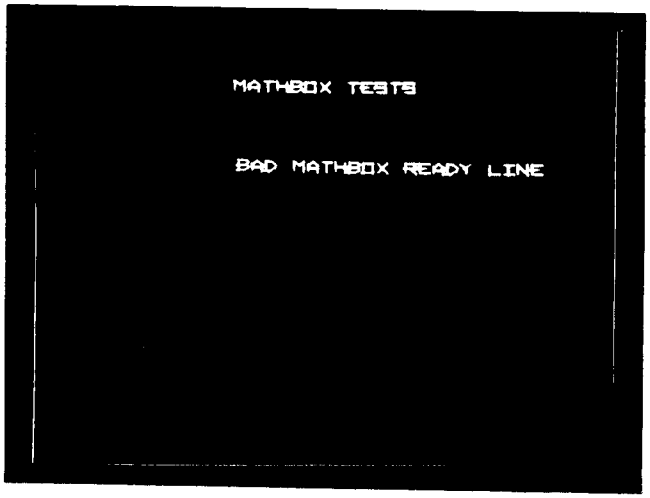

Figure 2-7 Mathbox Test Display—Test Fails

If matrix errors exist, the message *MATRIX ERRORS* will appear with the corresponding option switch settings for the diagnostic. Some matrix errors do not have a corresponding diagnostic. In this case, there will be no option switch setting.

Crosshatch Pattern Display

Press the auxiliary coin switch to obtain the Crosshatch Pattern display as shown in Figure 2-8. Verify the following display characteristics:

- Corners are closed and the diagonal lines form symmetrical diamond-shaped squares.
- All four corners of the border are completely visible and are within ¼-inch from the black edge of the screen.
- Pattern is not tilted more than ¼-inch between corners.
- Pattern is a uniform green color.

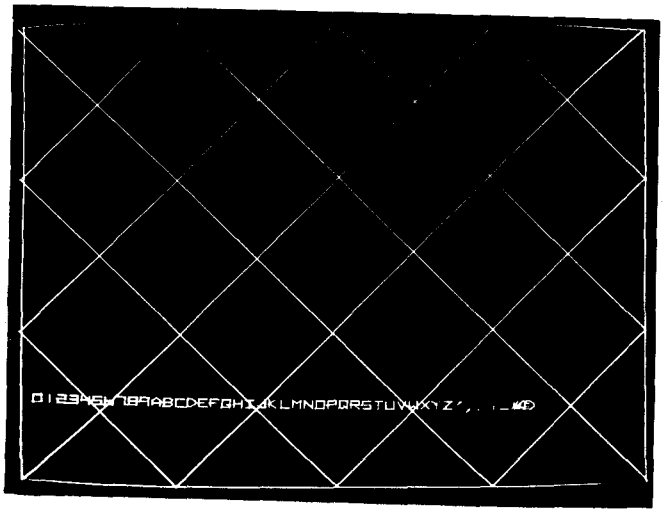

Figure 2-8 Crosshatch Pattern Display

If any of the preceding characteristics are not correct, refer to the linearity adjustment procedure in the Analog Vector-Generator schematic diagrams.

Grid Pattern Display

Press the auxiliary coin switch to obtain a Grid Pattern display as shown in Figure 2-9. Verify that the following grid colors can be obtained, in order, by pressing either fire trigger:

Red
Green
Blue
Purple
White
Yellow
Turquoise

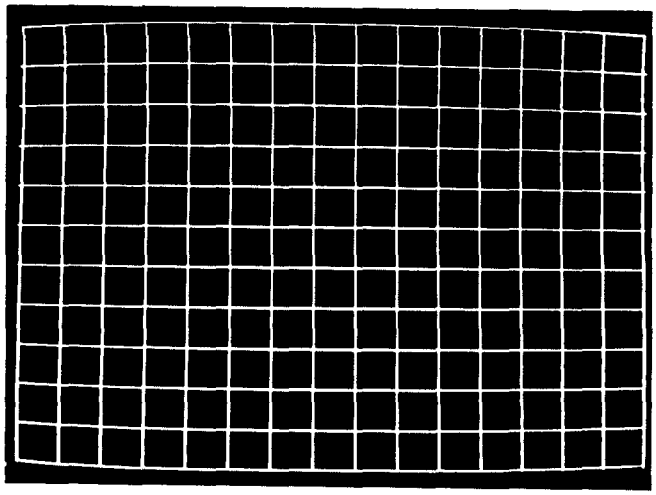

Figure 2-9 Grid Pattern Display

Verify the following display characteristics:

- Grid lines do not exhibit pincushioning or barreling and the lines are straight within ⅛-inch.
- Convergence shall not exceed 2.0 mm, as checked with the white grid.

If any of the preceding display characteristics are not correct, refer to the linearity adjustment procedure in the Analog Vector-Generator schematic diagrams and to the convergence adjustment procedure in the Display Manual.

Intensity Test Display

Press the auxiliary coin switch to obtain the Intensity Test display as shown in Figure 2-10. Verify the following display characteristics:

- Top row of color bars are red, blue, and green.
- All three sets of color bars have six lines with the same intensity.
- Bars underneath the top row of color bars are white.
- Bars underneath the white color are yellow, turquoise, and purple.
- *DIM, LOW,* and *HIGH* appear in the bottom center of the display. If the word *OFF* can be seen, the display is too bright. If the word *LOW* cannot be seen, the display is not bright enough.

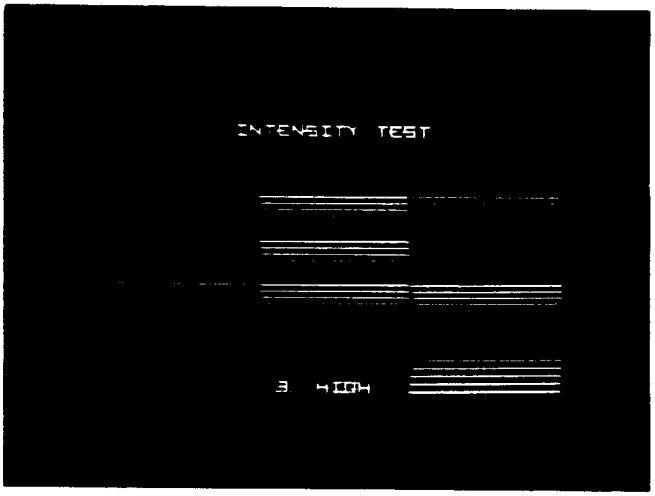

Figure 2-10 Intensity Test Display

If the preceding display characteristics are not correct, refer to the Display Manual for the brightness adjustment procedure or to determine the possible cause of failure.

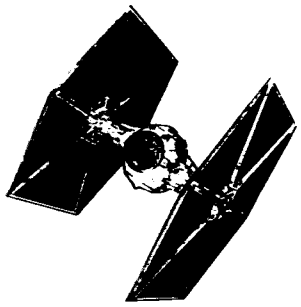

Bipolar Offset Test Display

Press the auxiliary coin switch to obtain the Bipolar Offset Test TEST display as shown in Figures 2-11 and 2-12. The line width should be ⅛-inch or less. If not, adjust the X/Y bipolar offset potentiometers located in the digital-to-analog converter and bipolar current sources circuit on the Analog Vector-Generator PCB.

Figure 2-11 Bipolar Offset Test Display–Test Passes

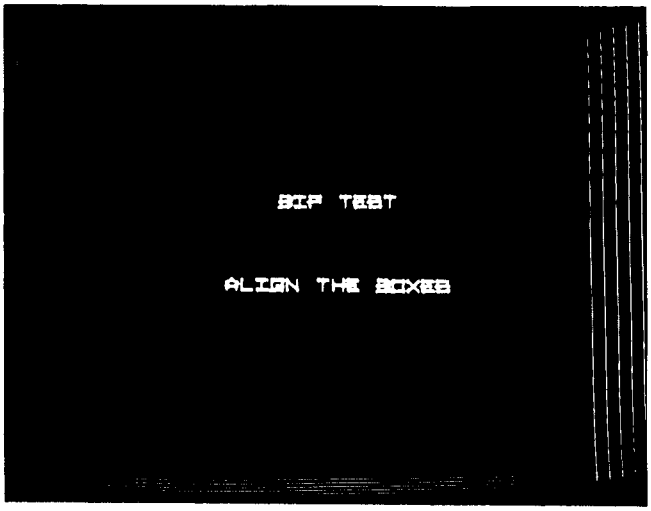

Figure 2-12 Bipolar Offset Test Display–Test Fails

Scale Test Display

Press the auxiliary coin switch to obtain the Scale Test Linear display as shown in Figure 2-13. A large green square should appear in the center of the screen and then smoothly shrink to a point. Next, a large green *SCALE TEST LINEAR AND BINARY* square appears and shrinks smoothly, then pauses and continues to shrink. There should be eight pauses before the square shrinks to a point. After each pause and just when the square begins to shrink, the size of the square should not change appreciably. If a large change in the size of the square occurs, an error may exist. After the eighth pause, the sequence repeats with the Scale Test Linear and Binary display as shown in Figure 2-14.

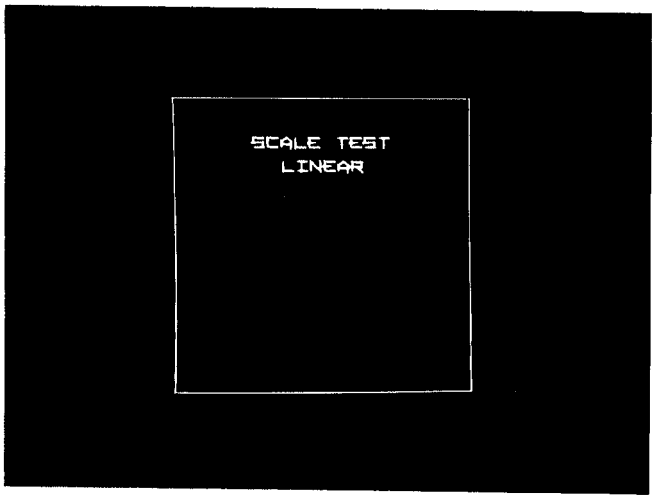

Figure 2-13 Scale Test Linear Display

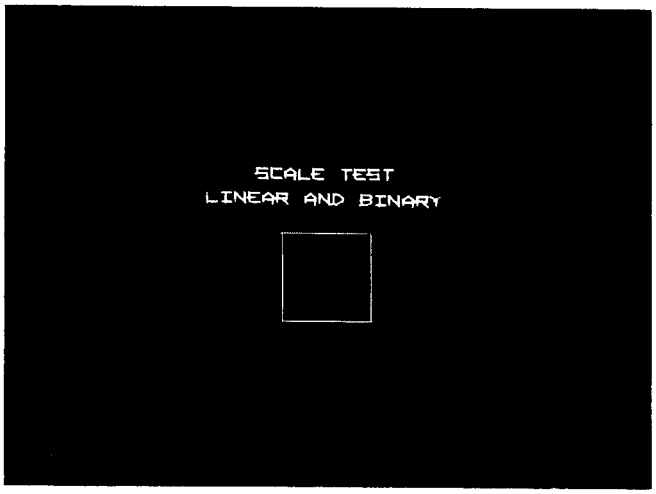

Figure 2-14 Scale Test Linear and Binary Display

Raster Screen Display

Press the auxiliary coin switch to obtain the Raster Screen display as shown in Figure 2-14. This display is the last of the self-test displays and is used by the manufacturer to adjust the white tracking of the display circuitry.

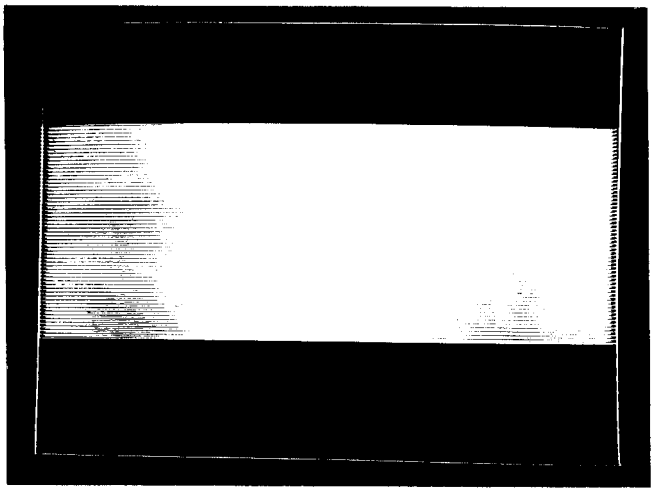

Figure 2-15 Raster Screen Display

NOTE

Pressing the auxiliary coin switch to end the preceding Raster Screen display will repeat the self-test sequence starting with the Switch Test display. If desired, turn the self-test switch off, then on again, to obtain the Accounting and Game Times display.

Troubleshooting

This chapter contains a discussion of troubleshooting aids and techniques to assist the service technician when a trouble is suspected in this game. Most troubles can be located quickly by following the information in this chapter. However, if problems persist, contact your nearest Atari Customer Service office listed on the inside front cover of this manual for assistance.

A thorough knowledge of game operation is desirable for effective troubleshooting. In addition to the operation and service information in the Schematic Package Supplement included with this manual, refer to *The Book, A Guide To Electronic Game Operation and Servicing,* available from Atari, Inc., for more information on coin-operated electronic games.

NOTE

We recommend that troubleshooting and repair procedures be performed by a qualified electronic technician.

Chapter 3

Troubleshooting Aids

Troubleshooting aids are provided throughout this manual and the Schematic Package Supplement. The following information is intended to acquaint the service technician with the portions of these documents that contain useful troubleshooting and repair information.

Assembly and Component Locations

The illustrated parts lists in Chapter 5 illustrate the locations of assemblies and components. Printed-circuit board (PCB) illustrations aid in rapidly locating components contained on the corresponding schematic diagram(s).

Schematic Diagrams

Complete schematic diagrams are provided in the Schematic Package Supplement. Component designations and their electrical values are included on the schematic diagrams. Memory maps are also included in the Schematic Package Supplement. Block diagrams of the major circuits on the game PCB (with sheet numbers to aid in locating the appropriate schematic diagrams) are included in the Schematic Package Supplement.

Troubleshooting Procedures

This game will test itself and provide data to aid in localizing troubles to a major circuit. Self-test procedures are provided in Chapter 2. Refer to the following section on Troubleshooting Techniques for a suggested troubleshooting sequence that uses the self-test procedures. Detailed troubleshooting procedures for locating defective components are provided in the Troubleshooting Guide included in the Schematic Package Supplement. These procedures use hardware diagnostic tests and the Atari CAT Box to troubleshoot the game PCB.

Troubleshooting Techniques

The following troubleshooting steps are arranged in a sequence recommended for locating a defective component. The procedure begins with a check of the simple trouble possibilities and progresses to more extensive procedures for localizing the trouble to an assembly or major circuit, and then to a defective component.

Check Switch Settings

Incorrect switch settings can sometimes indicate a problem that does not exist. Refer to Chapter 1 Set-Up, to verify that the game has been installed properly and that the switches are set to their correct positions. Check for proper operation in all game-play modes.

Check Fuses

Check for open fuses. Refer to the Power Supply Assembly Parts List in Chapter 5, Illustrated Parts Lists, and to the Display Manual, for the location and rating of each fuse used in this game. Make sure that replacement fuses are the proper type and rating.

Check Power-Supply Voltages

Improper operation of all circuits usually indicates a power supply problem. Check that the proper line voltage is available to the power supply.

Localize Trouble

Determine the trouble symptom. Use the wiring diagrams in the Schematic Package Supplement to determine which assemblies or major circuits could cause the trouble. Perform the self-test procedure provided in Chapter 2 and, if necessary, refer to the Troubleshooting Guide for detailed troubleshooting procedures.

Visual Check

Visually check for obvious problems in the portion of the game where a trouble is suspected. For example, check for loose or defective solder connections, integrated circuits loose in their sockets, loose cable connections, broken wires, damaged printed-circuit boards or components.

Check Individual Components

WARNING

To avoid electrical shock, turn the game off before removing or replacing components.

CAUTION

Transistors and integrated circuits soldered in place are difficult to remove without damaging the printed circuit board or component. Be extremely careful when removing these components.

Check soldered-in components by disconnecting one end to isolate the measurement from the affects of the surrounding circuitry. Often, direct substitution is the most practical way to determine if a component is faulty. However, eliminate the possibility of some other circuit problem existing which could damage the substitute component.

Repair the Assembly

Repair or replace the defective part. Refer to Chapter 4, Maintenance and Repair for special repair and replacement procedures. Check for proper operation of any repaired circuit.

Maintenance

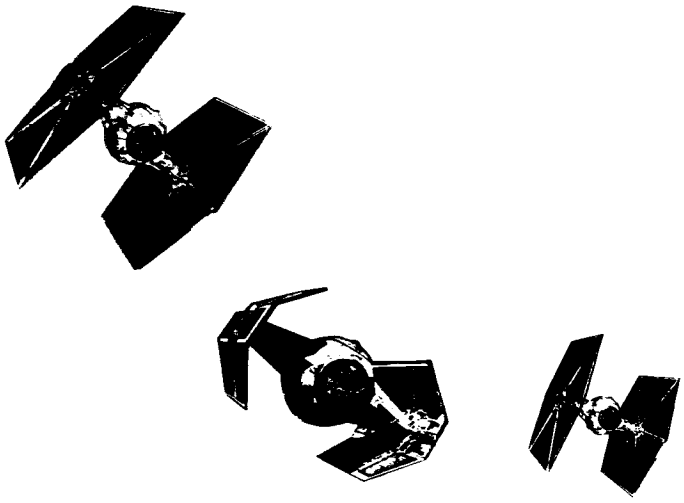

The maintenance procedures provided in this chapter are for those items which are subject to the most severe use. To assure the maximum trouble-free operation from this game, Atari recommends that periodic routine maintenance be performed on the game components described in the following procedures. How often routine maintenance is performed depends upon the game environment and frequency of play.

⚠ WARNING ⚠

To avoid possible electrical shock hazard, unplug the game prior to performing any maintenance.

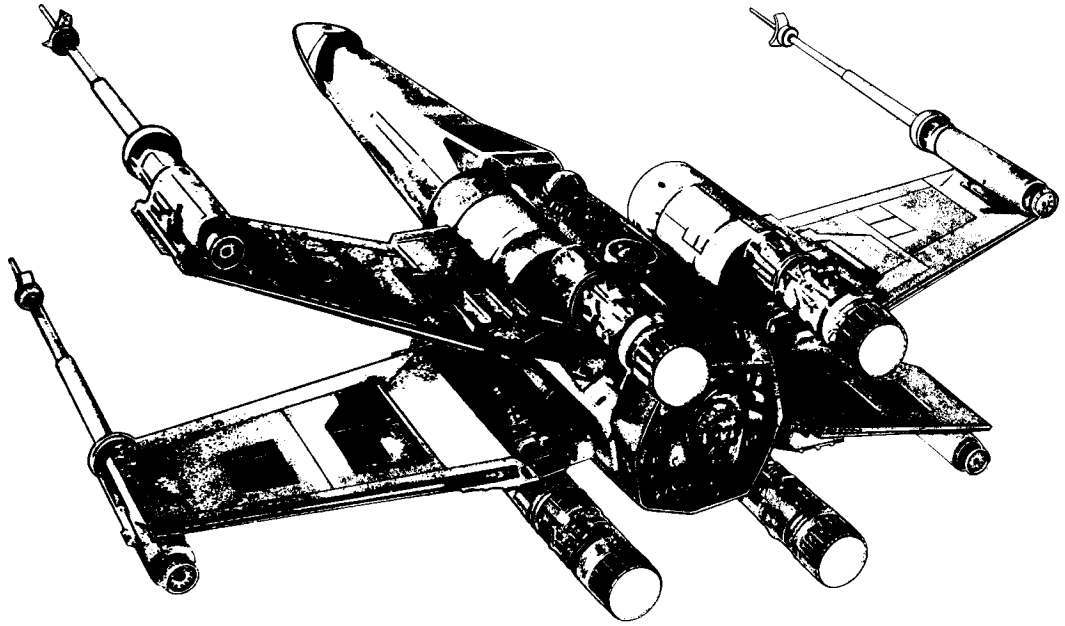

Chapter 4

Cleaning Requirements

This game cabinet and display shield may be cleaned with any non-abrasive household cleaner. The coin mechanism should be cleaned periodically with hot or boiling water and a mild detergent. A toothbrush may be used to remove any stubborn build-up of residue in the coin path. After cleaning the coin mechanism, flush thoroughly with hot or boiling water and blow out all of the water with compressed air. Compressed air is also recommended for cleaning dust from the interior of the cabinet.

Opening the Control Panel

1. Unlock and remove the rear access panel.
2. Reach up through the rear of the cabinet to the top of the control panel to remove the two nuts and washers that secure the control panel using a ⅜-inch combination wrench.
3. Lift the control panel at the top edge and tilt it toward you. The control panel has foam tape on it. Make sure the tape is in good condition.

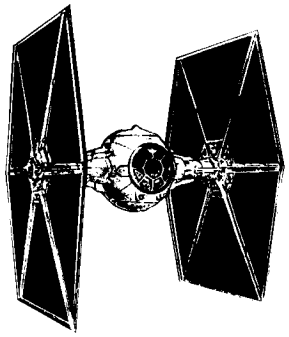

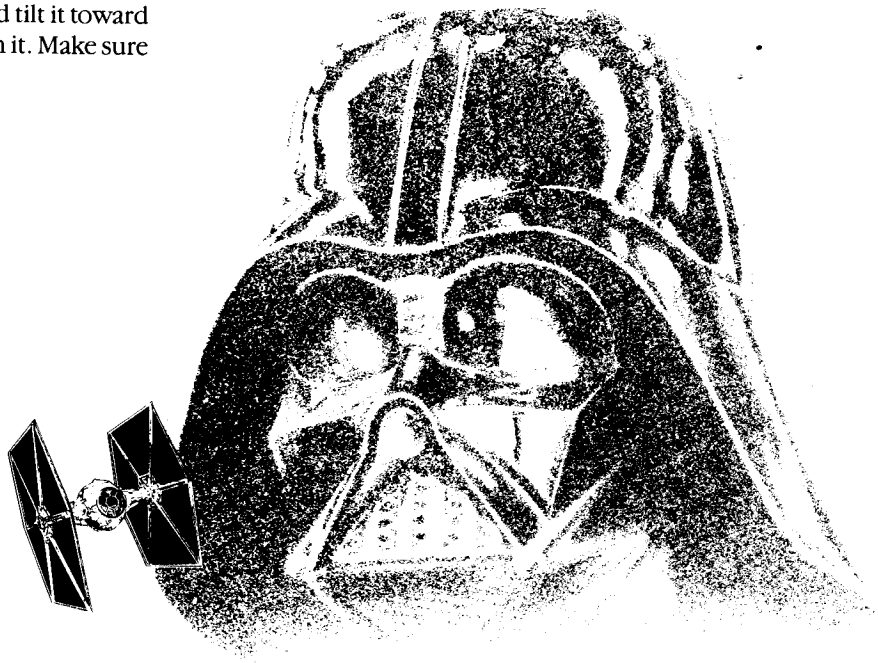

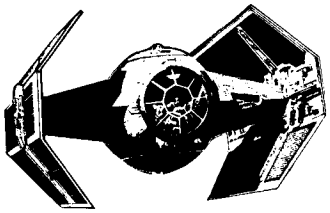

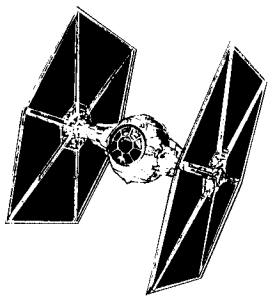

Flight Control Maintenance

Routine preventive maintenance on the flight control involves lubricating the moving parts and checking the mounting screws and nuts for proper tightness approximately every four months. The flight control consists of a handle assembly and a steering assembly. The handle assembly controls the vertical motion, and the steering assembly controls the horizontal motion of the display. Routine maintenance can be performed without removing the flight-control assembly from the game. After any corrective maintenance is performed, the flight control should be recalibrated as described in Chapter 1. Refer to Figures 4-1 and 4-2 for the locations of the parts mentioned in the following procedures.

Routine Maintenance

Routine preventive maintenance on the flight control involves lubricating the moving parts and checking the mounting screws and nuts for proper tightness approximately every four months.

Lubrication. Perform periodic lubrication of the flight control assembly as follows (see Figures 4-1 and 4-2):

1. Open the control panel as previously described in this chapter.

> **NOTE**
>
> The handle-assembly covers are attached with tamper-proof socket screws. A special 3/32-inch hex-key tool is supplied with each game (Atari part no. 178126-001).

2. Use the special 3/32-inch hex-key tool to remove the four tamper-proof socket screws from the handle assembly cover.
3. Lift off the handle assembly cover and lubricate the following parts inside the flight control: (Refer to Figures 4-1 and 4-2 for an illustration of the lubrication points.)
   - Apply two drops of light machine oil lubricant (Atari part no. 107013-001) to the insides of the four shaft bearings.
   - Brush a light film of Nyogel 779 lubricant (Atari part no. 178027-001) on the teeth of the two small spur gears.
   - Apply a small amount of WD-40 or a light machine oil to the potentiometer shafts as needed for squeaking.

Screw and Nut Tightness. Use the appropriate hex-head and combination wrenches to check the hex-head cap screws and mounting nuts for tightness. Refer to Figures 4-1 and 4-2 for an illustration of the cap screw and mounting nut locations.

Removing the Handles

Perform the following procedure to remove the handles from the handle assembly (see Figure 4-1):

1. Use a 7/64-inch hex driver to remove the four cap screws that hold the covers on the handles. Be careful when removing the covers because the trigger and pushbutton springs can fall free from the handles.
2. Unsolder the three harness wires from the trigger and pushbutton microswitches inside each handle.
3. Use a 7/64-inch hex driver to remove the four cap screws that hold the handles to the shaft.
4. Use a 3/16-inch punch and gently drive the two roll pins from the shaft.
5. Gently slide the handles from the shaft.
6. Reassemble in reverse order.

Removing the Flight Control

> **NOTE**
>
> Certain corrective maintenance procedures can be performed with the flight control attached to the control panel. However, for convenience and to avoid damaging the control panel, we recommend that the flight control be removed from the control panel before any maintenance is performed.

Perform the following procedure to remove the flight control from the control panel:

1. Open the control panel as previously described.
2. Unplug the flight-control harness assembly.
3. Use a 7/16-inch combination wrench to remove the four locknuts and washers that mount the flight control to the control panel.
4. Carefully guide the flight control through the hole in the control panel.

Disassembling the Handle Assembly

Perform the following procedure to disassemble the handle assembly (see Figure 4-1):

> **NOTE**
>
> Removing the handle assembly from the steering assembly is not necessary to perform the procedure below. However, if you wish to do so, refer to *Disassembling the Steering Assembly* in this chapter for the procedure that describes how to separate the two assemblies.

1. Use the special 3/32-inch hex-key tool to remove the four tamper-proof cap screws from the handle-assembly covers.
2. Remove the handles as previously described.
3. Gently pull the harness wires out of the hollow shaft.
4. Use a 9/64-inch hex driver to remove the cap screw and washer that hold the spring handle pin to the handle assembly shaft.
5. Slide the spring-handle pin out of the shaft.
6. Use a 7/64-inch hex driver to loosen the cap screw that holds the large (60 tooth) spur gear to the shaft.
7. Slide the large (60 tooth) spur gear down the shaft to expose the shaft retainer on the right side.

> **⚠ WARNING ⚠**
>
> Shield your face and eyes when prying out the retainers because they can fly loose at a high velocity. Cover the retainers with a rag or any material that will trap the retainer.

8. Use a right-angle slotted screwdriver, or equivalent, to pry the retainer from the shaft.
9. Repeat steps 7 and 8 to remove the retainer on the opposite side.
10. Gently slide the shaft from the housing. Be careful not to lose the torsion springs.
11. Use a 7/64-inch hex driver to loosen the cap screw that holds the small (14 tooth) spur gear to the potentiometer shaft.
12. Use a ½-inch combination wrench to remove the nut and washer that hold the potentiometer to the mounting bracket.
13. Slide the potentiometer from the bracket. Be careful not to lose the small spur gear, nut, and washer.
14. Use a 5/32-inch hex-head wrench and 3/8-inch combination wrench to remove the two bumpers from the frame.
15. Reassemble the handle assembly as described in the following procedure.

Reassembling the Handle Assembly

Follow the steps below to reassemble the handle assembly (see Figure 4-1):

1. Use a 5/32-inch hex driver and 3/8-inch combination wrench to install the two bumpers on the frame.
2. Insert the large (60 tooth) spur gear with the collar facing away from the bearing. Hold the gear in line with the bearing hole. (The gear fits through the slot on the right front of the frame.)
3. Slide the shaft through the right-hand bearing and the spur gear. Do not insert the shaft past the outside edge of the spur-gear collar.
4. Apply a heavy film of Nyogel 779 lubricant (Atari part no. 178027-001) to the inside of the springs.
5. Hook the straight end of the first torsion spring through the hole closest to the right side of the frame.
6. Hold the first torsion spring in line with the shaft so that the looped end of the spring is facing away from the spur gear.
7. Slide the shaft just through the first torsion spring.
8. Hook the straight end of the second torsion spring through the hole closest to the left-hand bearing.
9. Hold the second torsion spring in line with the shaft so that the looped end of the spring is facing the first torsion spring.
10. Slide the shaft through the second torsion spring and the left-hand bearing.
11. Position the shaft so that the retainer grooves are just inside the bearings.
12. Install the two retainers in the shaft grooves.
13. Turn the shaft so that the two large holes and the smaller centered hole are facing upward.
14. Locate the hole in the spring-handle pin. Insert the end of the spring handle pin that is closest to the hole through the slot in the frame and through the hole in the shaft. Make sure that both torsion spring looped ends are wrapped over the spring handle pin.
15. Position the spring-handle pin so that the hole in the pin is aligned with the hole in the shaft.
16. Use a 9/64-inch hex driver to tighten the cap screw and washer that secure the pin to the shaft.
17. Align the cap screw in the spur-gear collar with the threaded hole in the shaft, and use a 7/64-inch hex driver to tighten the cap screw.
18. Insert the potentiometer shaft through the hole in the mounting bracket. Place the washer, nut, and small (14 tooth) spur gear (with the collar facing inward) onto the shaft before fully inserting the shaft through the bracket.

19. Align the potentiometer so that the tab key is inserted into the keying slot.
20. Use a ½-inch combination wrench to slightly tighten the nut on the potentiometer shaft.
21. Turn the potentiometer shaft so that the flat side faces the center wire terminal.
22. Align the cap screw on the small (14 tooth) spur gear with the flat side of the shaft. Use a $\frac{7}{64}$-inch hex driver to tighten the cap screw.
23. Slide the potentiometer forward so that the teeth on the two spur gears are tightly meshed; then pull the potentiometer and small (14 tooth) spur gear away from the large spur gear about $\frac{1}{64}$-inch.
24. Use a ½-inch combination wrench to tighten the potentiometer to the mounting bracket.
25. Perform the procedure for installing the harness assembly provided at the end of this chapter.
26. Install the handles in the reverse order of the removal procedure previously described. Do not install the handle covers until the harness is installed and the proper wires are soldered to the trigger and pushbutton microswitches.
27. Check the vertical potentiometer alignment as described under *Aligning the Potentiometers.*
28. Install the handle assembly cover and use the special $\frac{3}{32}$-inch hex-key tool to tighten the four tamper-proof socket screws that secure the cover to the handle assembly.

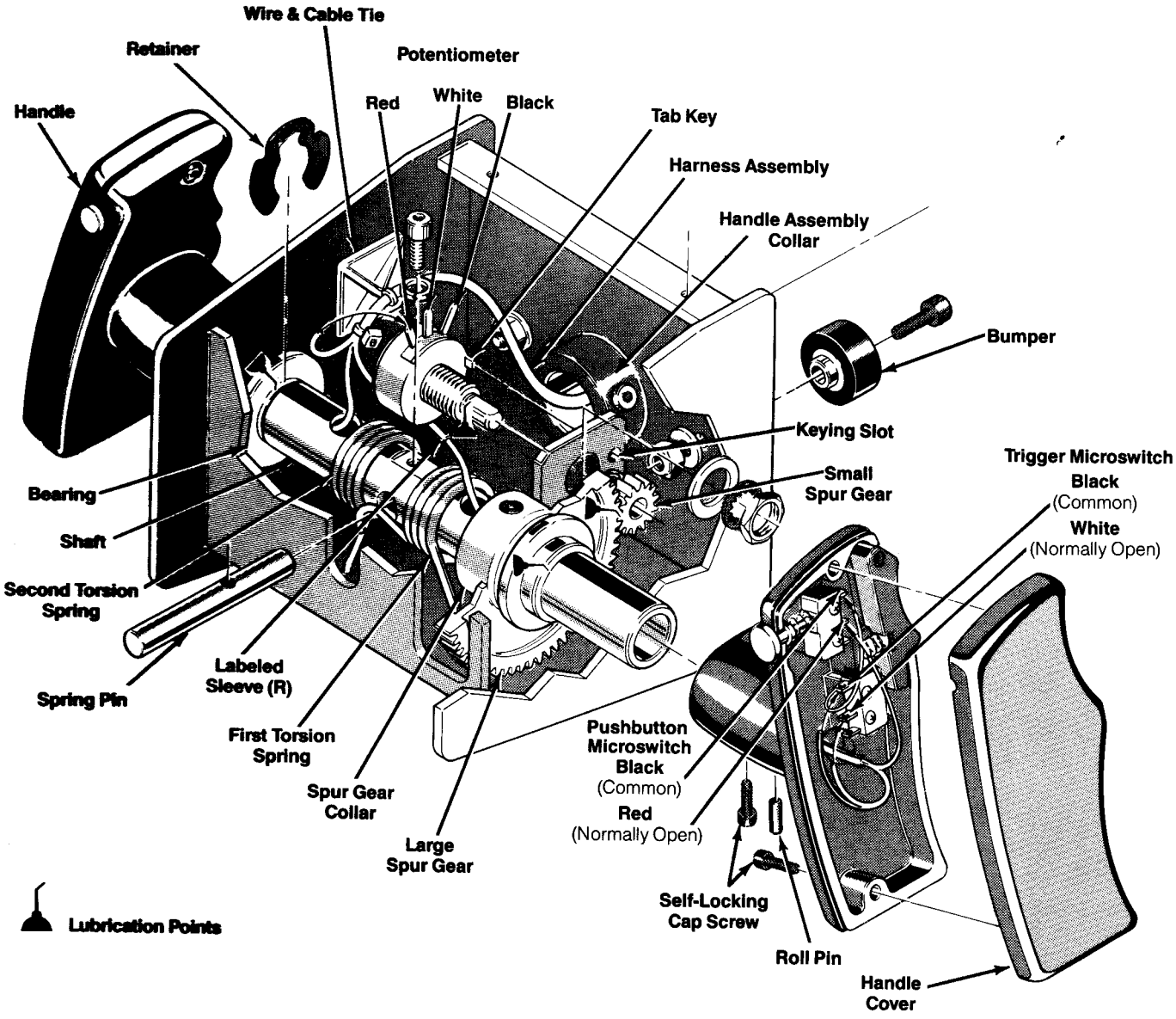

Figure 4-1 Handle Assembly

Disassembling the Steering Assembly

Perform the following procedure to disassemble the steering assembly (see Figure 4-2):

1. Remove the handle covers as described earlier in this chapter. Remember, be careful when opening the handles because the pushbutton and trigger springs may fall out.
2. Unsolder the three harness wires from the vertical potentiometer, handle pushbutton microswitch, and trigger microswitch.
3. Use a 7/64-inch hex driver (or ball-end driver) to remove the three cap screws that hold the steering-assembly shaft to the handle-assembly frame.
4. Gently pull the two assemblies apart. Make sure the harness wires are free to slide out of the handle-assembly shaft.
5. Use a 5/16-inch wrench to remove the anchor nut on the end of the anchor pin. (The anchor nut faces the open end of the frame.)
6. Slide the anchor pin out of the shaft.
7. Grasp the large (60 tooth) spur-gear and slide the shaft from the frame. The bearing spacer, torsion springs, and large flat washer will fall free.
8. Use a 7/64-inch hex driver to remove the cap screw holding the large spur gear to the steering shaft and a 5/64-inch hex driver to remove the set screw that holds the small spur gear to the potentiometer shaft.
9. Use a ½-inch combination wrench to remove the nut and washer that hold the potentiometer to the frame.
10. Unsolder the three harness wires from the potentiometer terminals.

WARNING

Shield your face and eyes when prying the retainer from the shaft since the retainer can fly loose at a high velocity. Cover the retainer with a rag or any material that will trap the retainer.

11. Use a slotted screwdriver, or equivalent, to remove the retainer from the shaft.
12. Use a 5/32-inch hex driver and 3/8-inch combination wrench to remove the two bumpers from the frame.
13. Reassemble the steering assembly as described in the following procedure.

Reassembling the Steering Assembly

Perform the following procedure to reassemble the steering assembly (see Figure 4-2):

1. Use a 5/32-inch hex driver and 3/8-inch combination wrench to install the two bumpers to the frame.
2. Snap the retainer into the groove in the shaft and slide the large flat washer down the long end of the shaft and against the retainer.
3. Apply a heavy film of Nyogel 779 lubricant (Atari part no. 178027-001) to the inside of the springs.
4. Hook the straight end of the first torsion spring through the hole closest to the rear of the frame. Slide the shaft through the outside bearing and the first torsion spring.
5. Hook the second torsion spring through the hole on the opposite side and closest to the front of the frame. Slide the shaft through the second spring and the opposite bearing.
6. Turn the shaft so that the threaded hole at the retainer end of the shaft faces up toward the open side of the frame. The hole through the center of the shaft will then be perpendicular to the open side of the frame.
7. Use a 5/16-inch combination wrench to install the anchor pin and nut through the hole in the center of the shaft. Make sure the torsion spring looped ends are wrapped under the anchor pin and nut.
8. Slide the large (60 tooth) spur gear onto the shaft with the collar facing out.
9. Align the cap screw in the spur-gear collar with the threaded hole in the shaft and use a 7/64-inch hex driver to tighten the cap screw.
10. Insert the potentiometer shaft through the hole in the frame and align the potentiometer so that the tab key is inserted into the keying slot.
11. Install the washer and nut on the potentiometer shaft but do not tighten.
12. Turn the potentiometer shaft so that the flat side faces the center wire terminal.
13. Align the cap screw on the small (28 tooth) spur gear with the flat side of the shaft and slide the small spur gear (with the collar facing inward) onto the potentiometer shaft.
14. Position the spur gear so that its teeth mesh with those of the large spur gear and use a 5/64-inch hex driver to tighten the set screw.
15. Slide the potentiometer forward so that the teeth on the two spur gears are tightly meshed; then slide the potentiometer and small spur gear away from the large spur gear about 1/64-inch.
16. Use a ½-inch combination wrench to tighten the potentiometer to the frame.
17. Slide the bearing spacer over the shaft at the end opposite the spur gears.
18. If necessary, lubricate the steering assembly as previously described.

NOTE

The remaining steps describe the procedure for attaching the steering assembly to the handle assembly.

19. Insert the steering-assembly shaft into the collar on the handle-assembly frame.
20. Align the three holes in the steering-assembly shaft with the three holes in the handle-assembly collar.
21. Use a 7/64-inch hex driver (or ball-end driver) to tighten the three cap screws.
22. Install the harness assembly as described in the following procedure.
23. Check the horizontal potentiometer alignment as described under *Aligning the Potentiometers.*

Installing the Harness Assembly

Perform the following steps to install the harness assembly into the flight control (see Figures 4-1 and 4-2):

1. If necessary, remove the handle cover as described under *Removing the Handles.*
2. Guide the harness wires into the spur-gear end of the hollow steering-assembly shaft.
3. Route and solder the wires to the potentiometers and microswitches. Note that the wire bundle that goes to the right handle is identified with a labeled sleeve (R).
4. Install the wire ties and the ground clip.

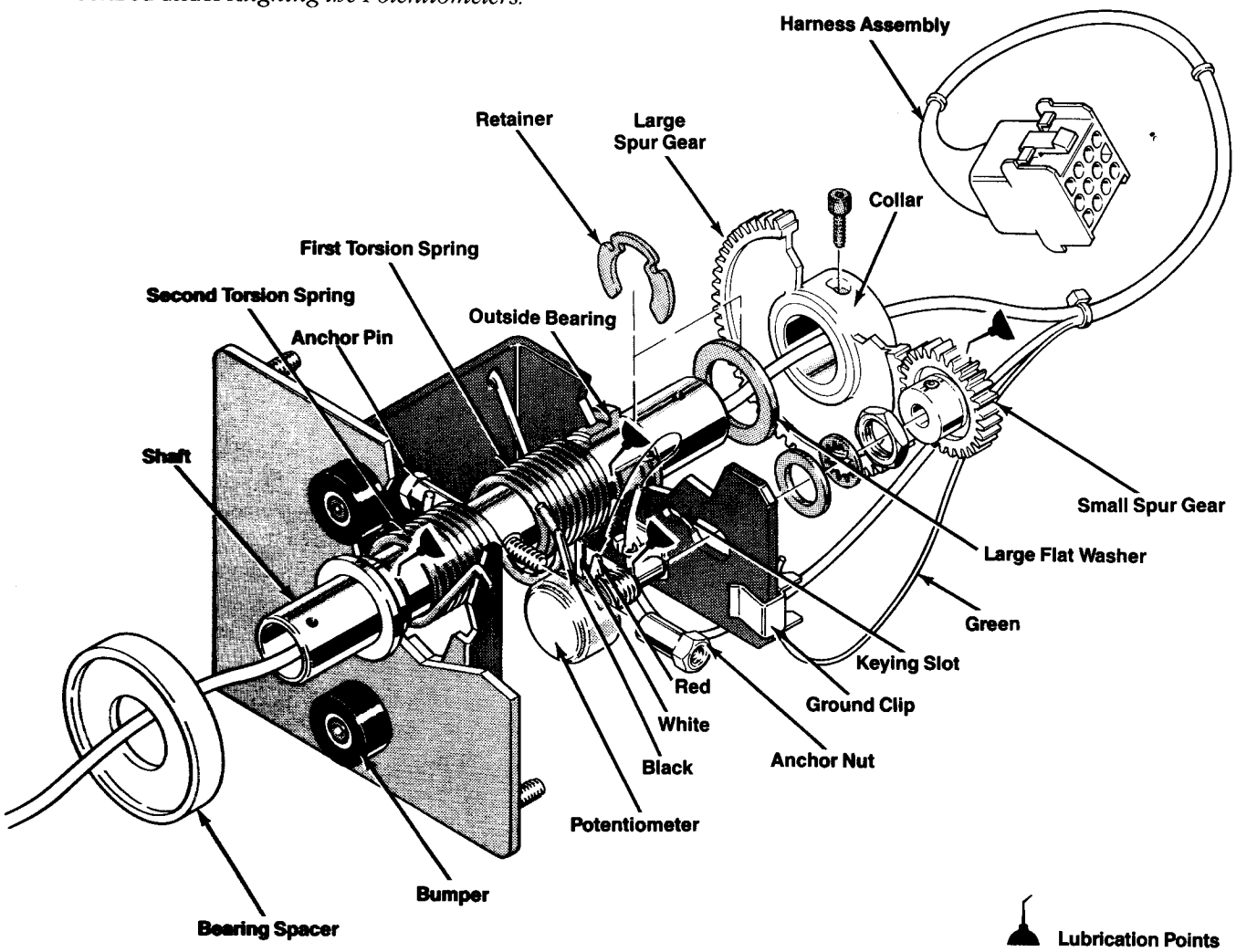

Figure 4-2 Steering Assembly

Aligning the Potentiometers

The following procedures describe the method for checking and aligning the vertical and horizontal flight control potentiometers to ensure that the target cursor on the display is centered when the flight control is released.

Preliminary Procedure

Perform the following procedure to determine if the vertical and/or horizontal potentiometers are misaligned:

1. Set the Self-Test switch to the on (up) position.
2. Perform the Switch Test Display procedure for checking potentiometer alignment as described in Chapter 2. If the self-test display (POT TEST portion) indicates that the flight control vertical and/or horizontal alignment is out of tolerance, perform the appropriate procedure(s) as follows:

Vertical Potentiometer Alignment

Perform the following procedure to align the flight control vertical potentiometer (see Figure 4-1):

1. If necessary, remove the flight control handle assembly cover with the special $\frac{3}{32}$-inch hex-key tool to gain access to the vertical motion potentiometer.
2. With the flight control centered (no tension on the return springs), check that the set screw on the potentioeter spur gear is facing the center (white) wire terminal. If not, use a ½-inch combination wrench and loosen the potentiometer mounting nut. Slide the potentiometer sideways in the mounting bracket until the gears disengage.
3. Turn the small spur gear until the Switch Test Display obtained in the Preliminary Procedure indicates that the vertical potentiometer is within the allowable limits.
4. Gently slide the potentiometer forward so that the spur gear teeth are tightly meshed (if necessary, move the large spur gear slightly to align the gear teeth—do not turn the potentiometer shaft). Recheck the Switch Test Display to make certain the potentiometer alignment is still within allowable limits.
5. Pull the potentiometer and small spur gear away from the large spur gear about $\frac{1}{64}$-inch and use the ½-inch combination wrench to tighten the potentiometer to the mounting bracket.
6. Install the handle assembly cover by using the special $\frac{3}{32}$-inch hex-key tool to tighten the tamper-proof socket screws.

Horizontal Potentiometer Alignment

Perform the following procedure to align the horizontal potentiometer (see Figure 4-2):

1. Open the game control panel as described previously in this chapter.
2. With the flight control centered (no tension on the springs), check that the set screw on the potentiometer spur gear is facing the center (white) wire terminal. If not, use a $\frac{5}{64}$-inch hex drive and loosen the set screw on the potentiometer spur gear. Slide the spur gear off the potentiometer shaft.
3. Turn the potentiometer shaft until the Switch Test Display obtained in the Preliminary Procedure indicates that the vertical potentiometer is within allowable limits.
4. Slide the spur gear onto the potentiometer with the set screw centered over the flat side of the shaft while aligning the gear teeth so they mesh with the large spur gear (if necessary, the small spur gear can be turned slightly—do not turn the potentiometer shaft).
5. Use the $\frac{5}{64}$-inch hex driver and tighten the spur-gear set screw. Recheck the Switch Test Display to make certain the potentiometer alignment is still within allowable limits. If not, repeat parts 2 through 4.

Removing the CRT Assembly

WARNING

The cathode-ray tube (CRT) assembly may implode if struck or dropped. Shattered glass can cause personal injury within a 6-foot radius. To reduce the risks of injury to people or of damage to the game components, we recommend that two people perform the following removal procedures.

Perform the following procedure to remove the CRT assembly from the game (see Figure 4-3):

1. Remove the rear access panel from the cabinet.
2. Discharge the high-voltage from the CRT before proceeding. The video display contains a circuit for discharging the CRT high voltage to ground when power is removed. However, to make certain, always discharge the CRT as follows:
   a. Attach one end of a large, well insulated, 18-gauge jumper wire to ground.
   b. Momentarily touch the free end of the grounded jumper to the anode by sliding it under the anode cap.
   c. Wait two minutes and repeat part b.
3. Disconnect the CRT neck-pin connector, anode lead, yoke connector (J105 on the Deflection PCB), degaussing coil connector (J104 on the Deflection PCB), and the 1-pin DAG spring connector.
4. Open the control panel as previously described in this chapter.
5. Remove the hardware that secures the lower housing to the cabinet. Then remove the housing.
6. Carefully remove the display shield and the display bezel.
7. Remove the hardware that secures the lower housing retainer to the cabinet. Then remove the retainer.

WARNING

Be extremely careful when removing the CRT mounting bolts because the CRT assembly can fall. We recommend that a second person **carefully** hold the CRT neck while the mounting bolts are being removed.

8. Use a ¼-inch combination wrench to remove the four bolts and washers from the front of the display mounting bracket.
9. **Carefully** lift the CRT assembly from the front of the cabinet.
10. Reinstall the CRT in the reverse order.

NOTE

Readjust the brightness, purity, and convergence as described in the Display Manual whenever the CRT is replaced.

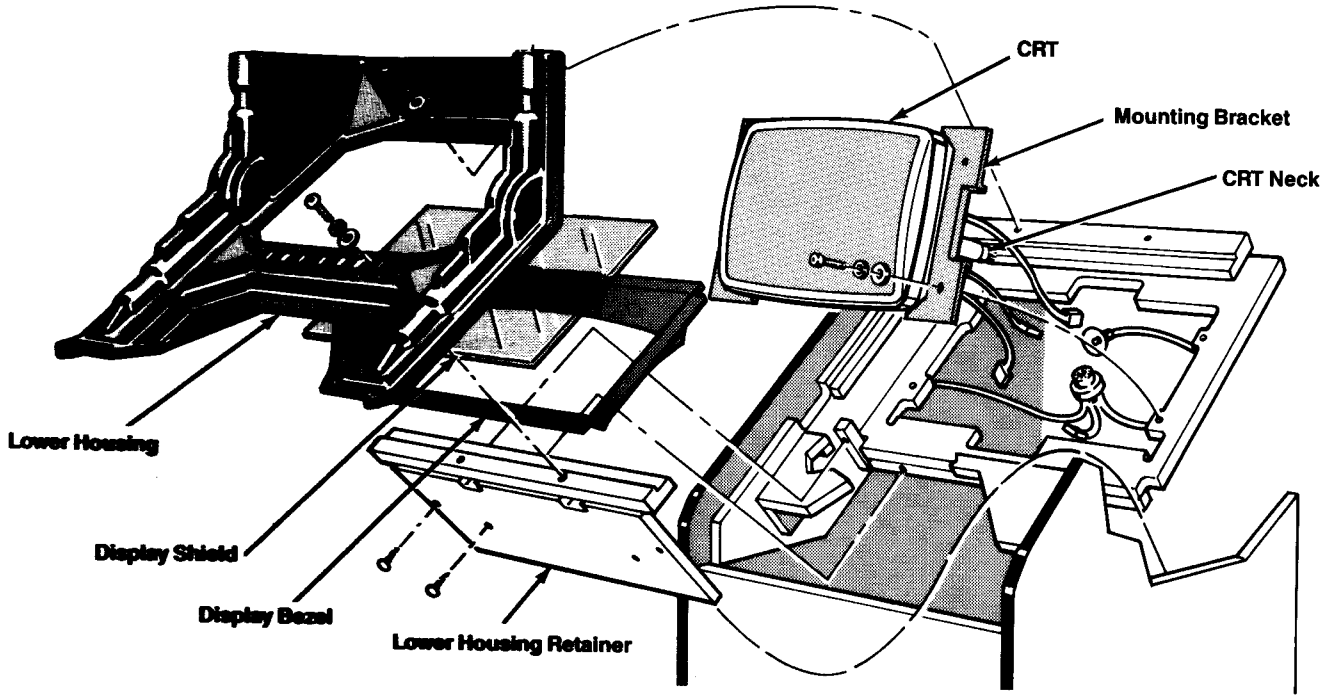

Figure 4-3 Removing the CRT Assembly

Wiring the Utility Panel Controls

Refer to Figure 4-4 for the proper wire connections when replacing the controls that are mounted on the utility panel.

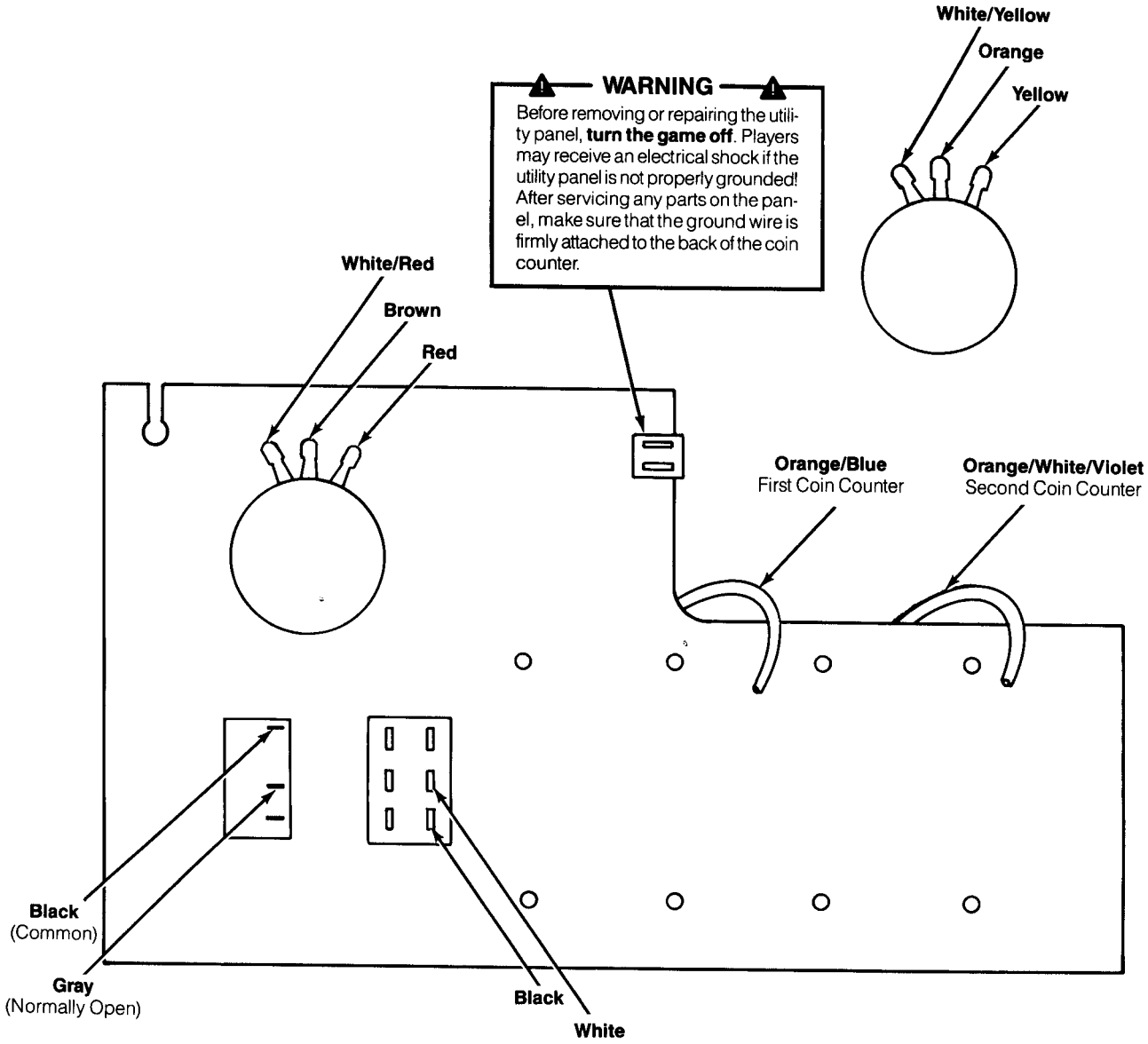

Figure 4-4 Utility Panel Wire Colors

Illustrated Parts Lists

This chapter provides information you need to order parts for your game. Common hardware (screws, nuts, washers, etc.) has been deleted from most of the parts lists. However, a parts list is included for the hardware to mount the printed-circuit boards (PCB) to the cabinet.

The PCB parts lists are arranged in alphabetical order by component. Each component subsection is arranged alphanumerically by reference designator.

Other parts lists are arranged alphanumerically by Atari part number. In these parts lists, all A-prefix numbers come first. Following these are numbers in sequence evaluated up to the hyphen, namely 00- through 99-; then 000598- through approximately 201000-.

When ordering parts, please give the part number, part name, number of this manual, and serial number of your game. This will aid in filling your order rapidly and correctly. We hope the results will be less downtime and more profit from your game.

Atari Customer Service numbers are listed on the inside front cover of this manual.

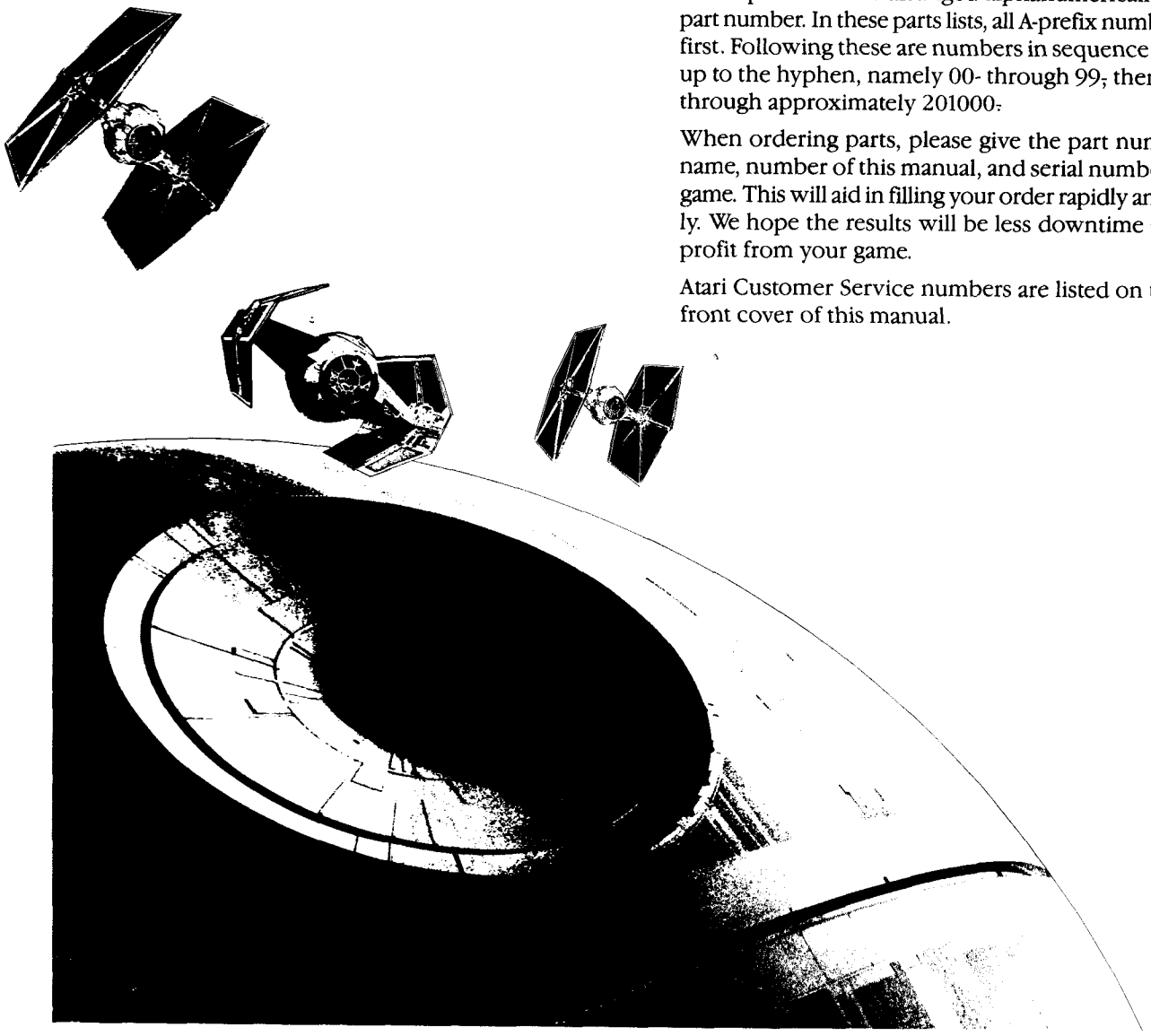

Chapter 5

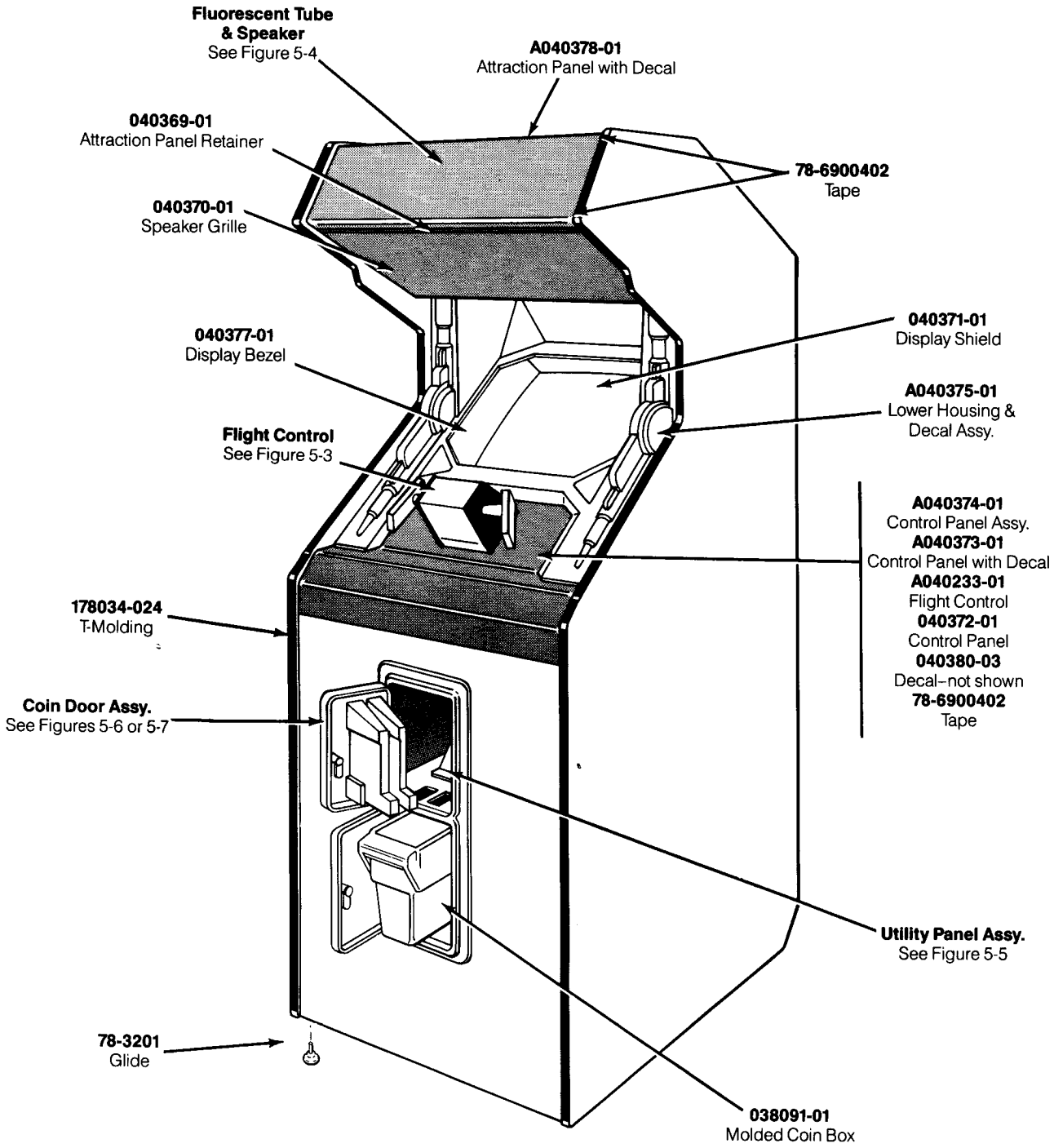

Figure 5-1A Cabinet-Mounted Assemblies
US-Built Cabinet
A040344-01 J

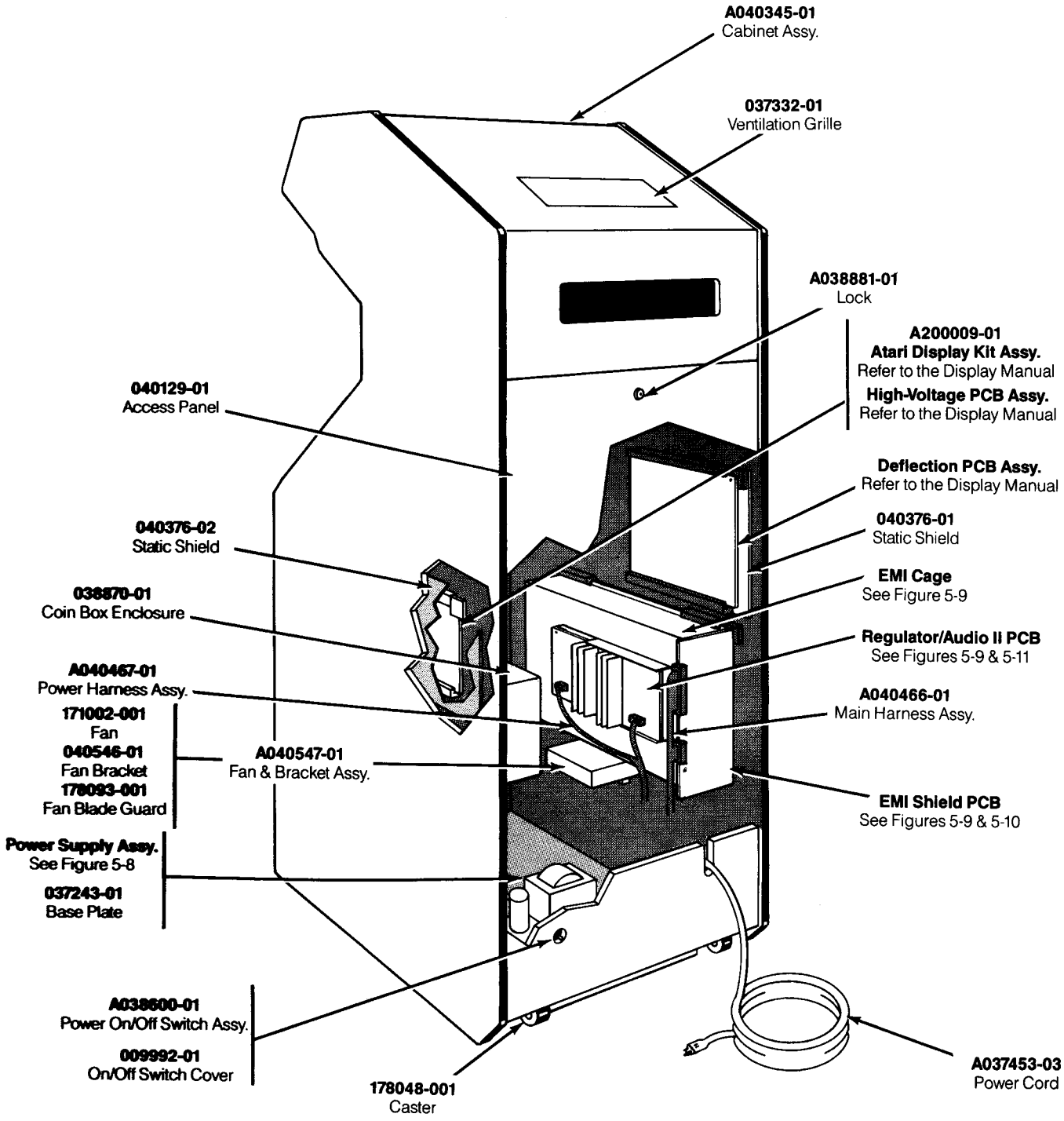

Figure 5-1A Cabinet-Mounted Assemblies, continued
US-Built Cabinet
A040344-01 J

Cabinet-Mounted Assemblies
US-Built Cabinet
Parts List

Part No.	Description
A037453-03	Strain-Relief Power Cord (U.S. and Canada)
A038600-01	Power On/Off Switch and Mounting Plate Assembly
A038881-01	Lock Assembly (for rear access panel) Acceptable substitute is part no. A038881-03
A040345-01	Cabinet Assembly (includes glides and PCB retainers, but not the rear access panel)
A040374-01	Control Panel Assembly—includes:
A040233-01	Flight Control
040372-01	Control Panel
040380-03	Decal for Control Panel (not shown)
A040375-01	Lower Housing and Decal Assembly
A040378-01	Attraction Panel and Decal Assembly
A040466-01	Main Harness Assembly
A040467-01	Power Harness Assembly
A200009-01	Atari 19-Inch Color X-Y Display Kit Assembly—includes:
A201106-01	Cathode-Ray Tube Assembly (not shown)
A201014-01	Deflection PCB Assembly
A201012-01	High-Voltage PCB Assembly
	The following four items are technical information supplements to this game.
SP-225	Star Wars Schematic Package
ST-225	Star Wars Label with Self-Test Procedure and Option Switch Settings
TM-225	Star Wars Operators Manual with Illustrated Parts Lists
TM-239	Atari 19-Inch and 25-Inch Color X-Y Display Manual
78-3201	Adjustable Glide
78-6900402	Vinyl Foam Single-Coated Adhesive Tape, ¼-Inch Wide x ⅛- Inch Thick (apply 36 inches to the surrounding edge of the control panel and 46 inches to the attraction panel.)
009992-01	On/Off Switch Cover
034536-01	Foam Pad—1 ¼-Inch Thick (located between the Deflection PCB and the cabinet wall and the High-Voltage PCB and the cabinet wall—not shown)
034536-02	Foam Pad—½-Inch Thick (located between the Regulator/Audio PCB and the EMI Cage, and between the EMI Cage and the cabinet wall—-not shown)
037243-01	Base Plate for Power Supply (not shown)
037332-01	Ventilation Grille
038091-01	Molded Coin Box
038870-01	Coin Box Enclosure
040129-01	Rear Access Panel (does not include lock)
040369-01	Attraction Panel Retainer
040370-01	Speaker Grille
040371-01	Video Display Shield
040376-01	Static Shield
040376-02	Static Shield
040377-01	Video Display Bezel

(Continued on next page)

Cabinet-Mounted Assemblies
US-Built Cabinet
Parts List, continued

Part No.	Description
A040547-01	Fan and Bracket Assembly—includes:
040546-01	Fan Bracket
171002-001	Fan
178093-001	Fan Blade Guard
178034-024	¾-Inch Black Plastic T-Molding
178048-001	2-Inch Rigid Caster
178126-001	Hex Wrench for Cabinet-Mounted Assys. (not shown—it is shipped in the coin box and required for the tamper-proof screws on the flight control)

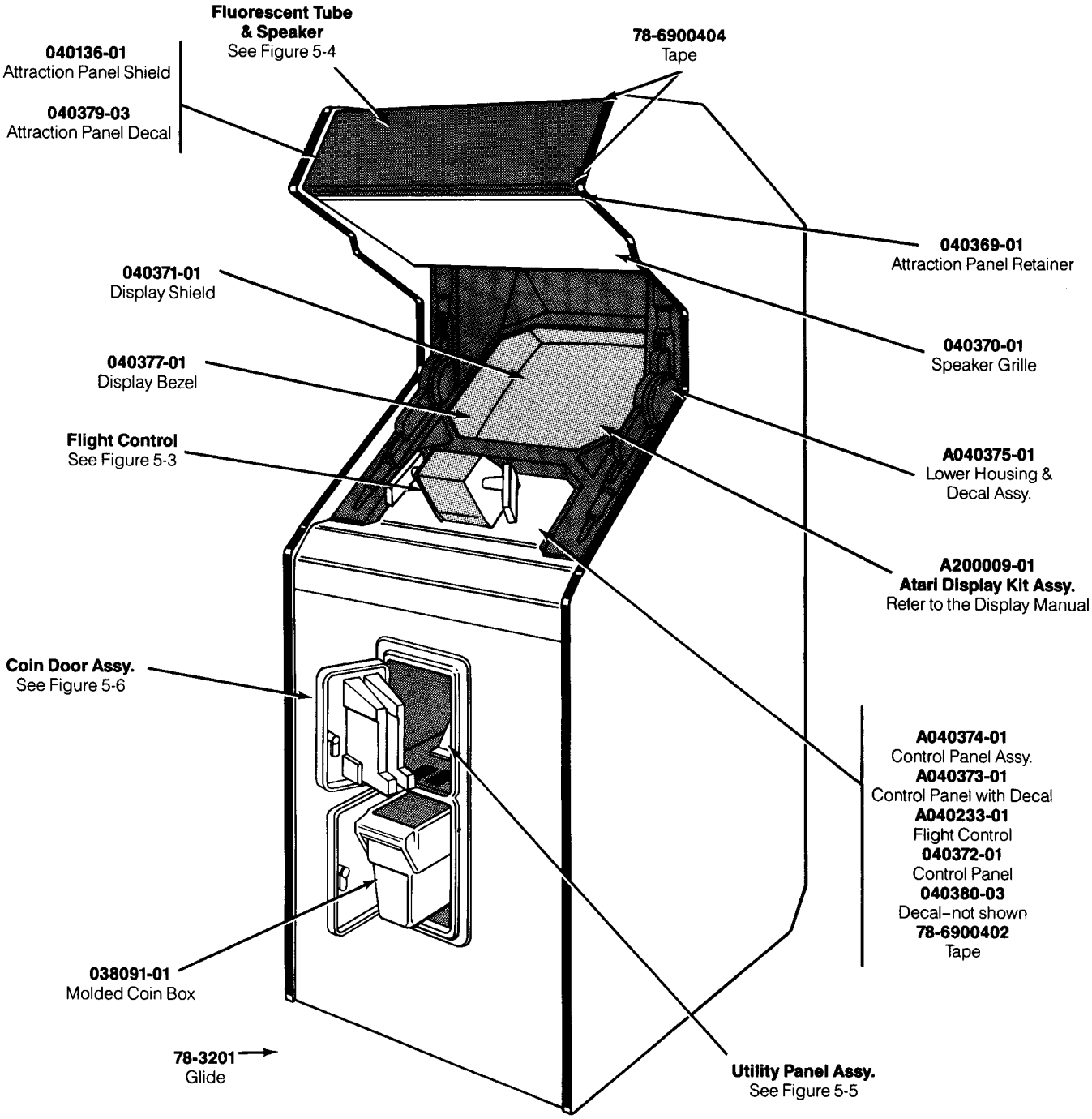

Figure 5-1B Cabinet-Mounted Assemblies
Ireland-Built Cabinet
A040344-10 J

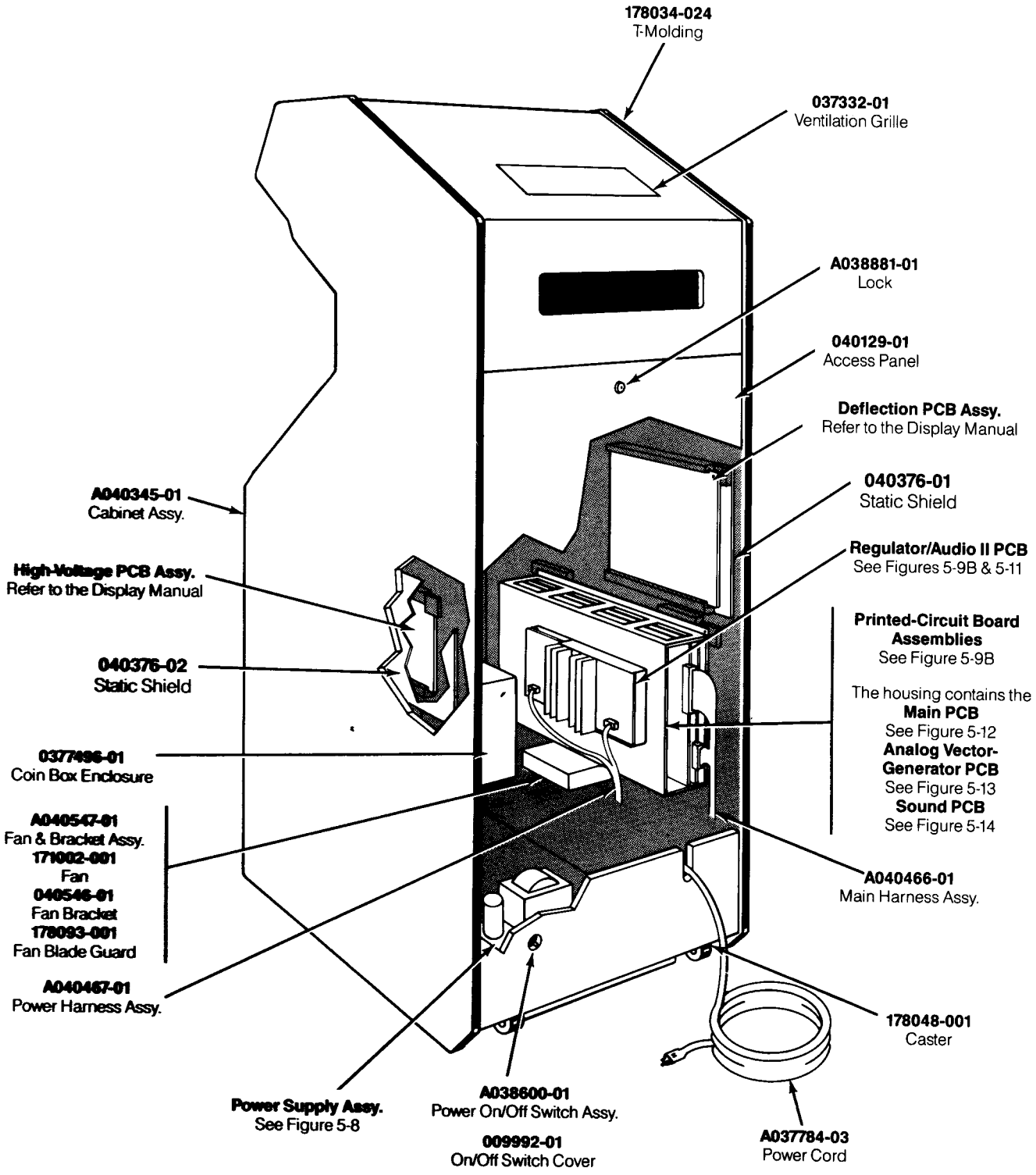

Figure 5-1B Cabinet-Mounted Assemblies
Ireland-Built Cabinet
A04040344-10 J, continued

Cabinet-Mounted Assemblies
Ireland-Built Cabinet
Parts List

Part No.	Description
A038600-01	Power On/Off Switch and Mounting Plate Assembly
A037784-03	Strain-Relief Power Cord (England and Ireland)
A038881-01	Lock Assembly (for rear access panel) Acceptable substitute is part no. A038881-03
A040345-01	Cabinet Assembly (includes glides and PCB retainers, but not the rear access panel)
A040374-01	Control Panel Assembly—includes:
A040233-01	Flight Control
040372-01	Control Panel
040380-03	Decal for Control Panel
A040375-01	Lower Housing and Decal Assembly
A040466-01	Main Harness Assembly
A040467-01	Power Harness Assembly
A040547-01	Fan and Bracket Assembly—includes:
040546-01	Fan Bracket
171002-001	Fan
178093-001	Fan Blade Guard
A040549-01	19-Inch Atari Color X-Y Cathode-Ray Tube (CRT) and Bracket Assembly — includes:
A200009-01	19-Inch Atari Color X-Y Display Kit Assembly—includes:
A201106-01	CRT Assembly (not shown)
A201014-01	Deflection PCB Assembly
A201012-01	High-Voltage PCB Assembly
201018-01	19-Inch CRT Bracket
	The following four items are technical information supplements to this game.
SP-225	Star Wars Schematic Package
ST-225	Star Wars Label with Self-Test Procedure and Option Switch Settings
TM-225	Star Wars Operators Manual with Illustrated Parts Lists
TM-239	19-Inch Atari Color X-Y Display Manual
78-3201	Adjustable Glide
78-6900402	Vinyl Foam Single-Coated Adhesive Tape, ¼-Inch Wide x ⅛- Inch Thick (apply 36 inches to the surrounding edge of the control panel—not shown)
78-6900404	Vinyl Foam Single-Coated Adhesive Tape, ¼-Inch Wide x ¼- Inch Thick (apply 46 inches to the attraction panel—not shown)
009992-01	On/Off Switch Cover
034536-01	Foam Pad—1 ¼-Inch Thick (located between the Deflection PCB and the cabinet wall and the High-Voltage PCB and the cabinet wall—not shown)
034536-02	Foam Pad—½-Inch Thick (located between the Regulator/Audio PCB and the PCB housing, and between the PCB housing and the cabinet wall—not shown)
037332-01	Ventilation Grille
038091-01	Molded Coin Box
038870-01	Coin Box Enclosure
040129-01	Rear Access Panel (does not include lock)
040136-01	Attraction Panel Shield
040369-01	Attraction Panel Retainer
040370-01	Speaker Grille
040371-01	Video Display Shield
040376-01	Static Shield

(Continued on next page)

Cabinet-Mounted Assemblies
Ireland-Built Cabinet
Parts List, continued

Part No.	Description
040376-02	Static Shield
040377-01	Video Display Bezel
040379-03	Attraction Panel Decal
178034-024	¾-Inch Black Plastic T-Molding
178048-001	2-Inch Rigid Caster
178126-001	Hex Wrench for Cabinet-Mounted Assys. (not shown—shipped in the coin box and used for the tamper-proof screws on the flight control)

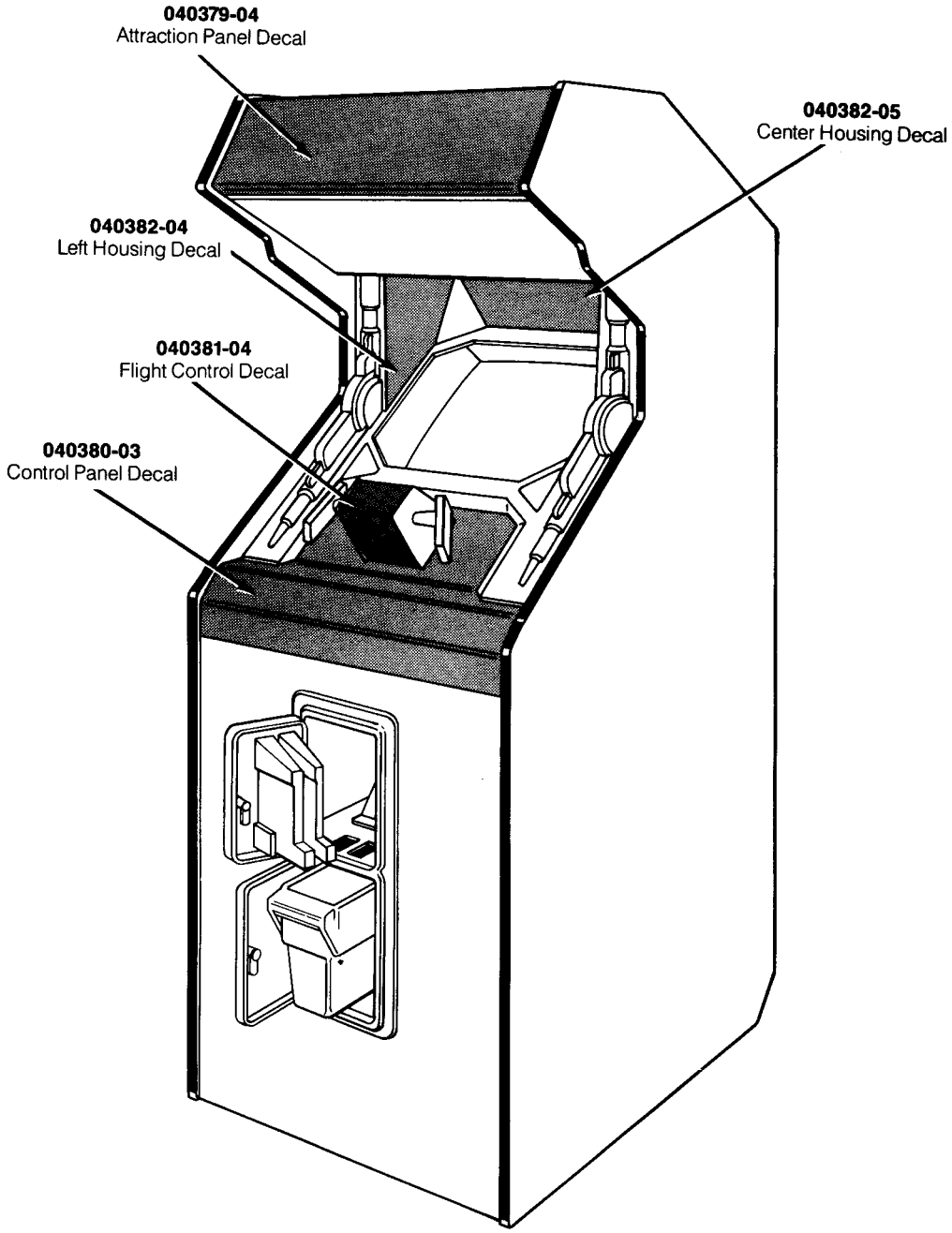

Figure 5-2 Star Wars Decals

Figure 5-2 Star Wars Decals
Parts Lists

Part No.	Description
040379-04	Attraction Panel Decal
040380-03	Control Panel Decal
040381-04	Flight Control Decal
040382-04	Left Display—Housing Decal
040382-05	Center Display—Housing Decal
040382-06	Right Display—Housing Decal (not shown)

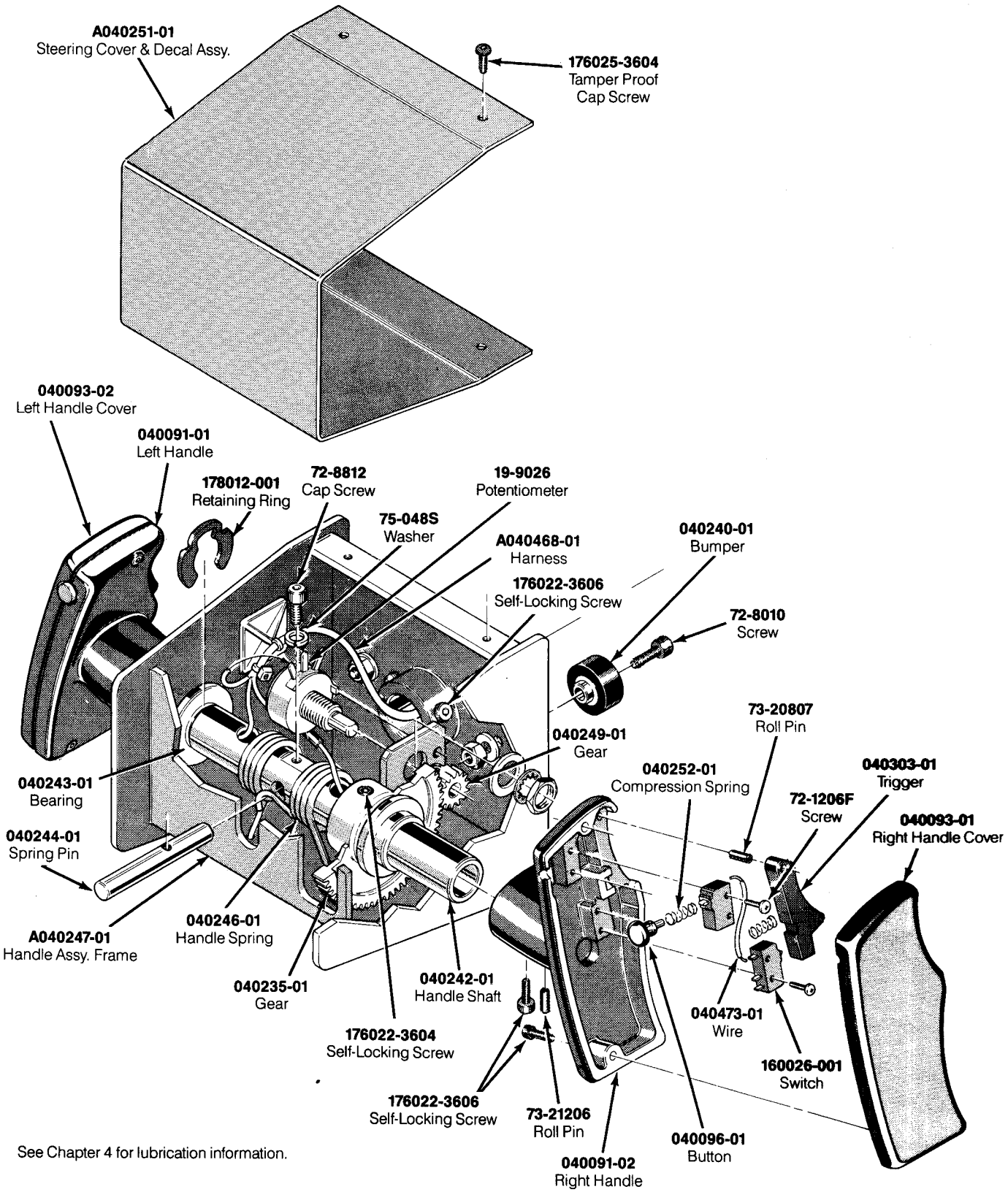

See Chapter 4 for lubrication information.

Figure 5-3 Flight Control Assembly
A040233-01 D

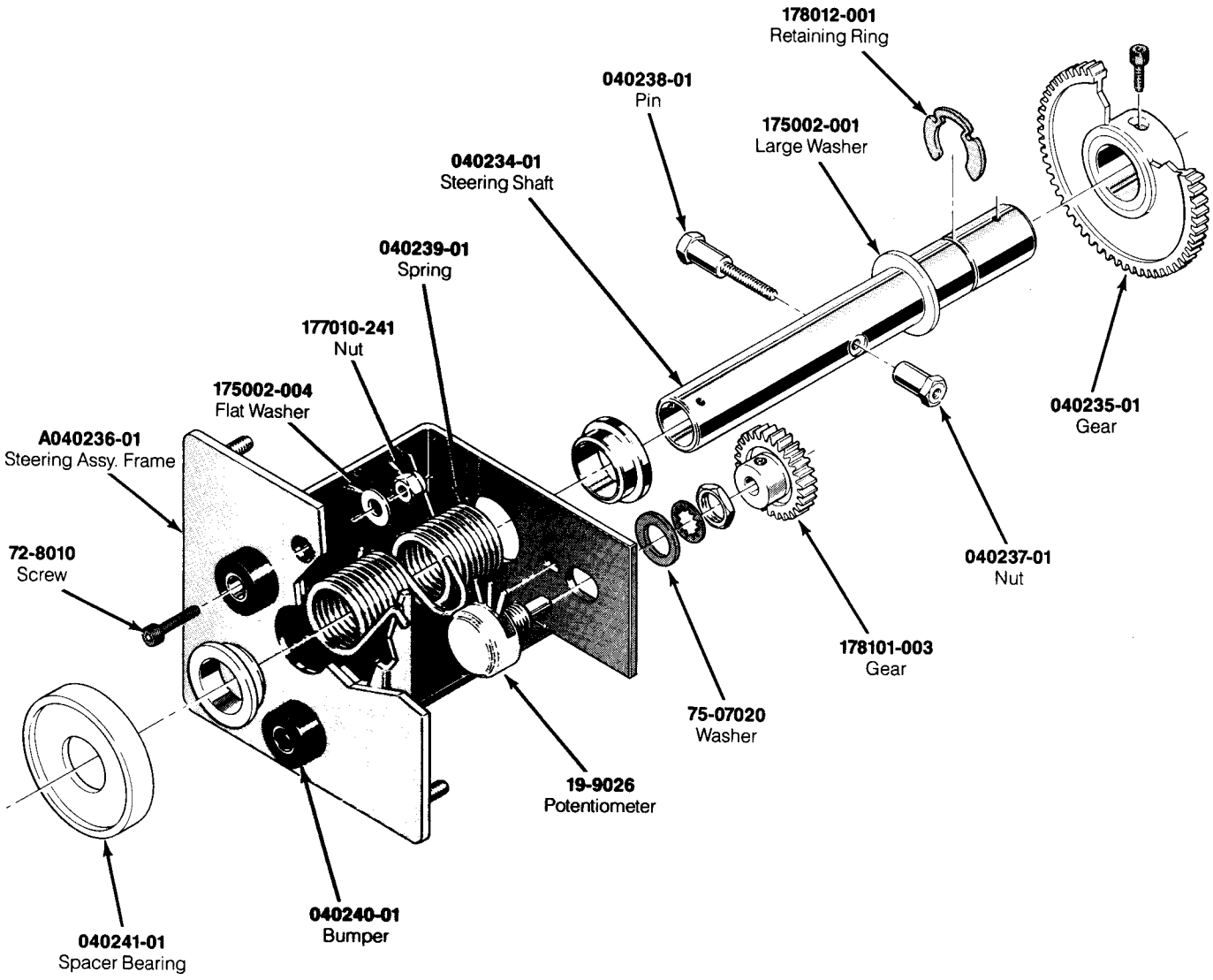

See Chapter 4 for lubrication information.

Figure 5-3 Flight Control Assembly, continued
A040233-01 D

Flight Control Assembly
Parts List

Part No.	Description
A040236-01	Steering Assembly Frame—includes:
040243-01	Modified Bearing
040555-01	Steering Frame Weldment
72-L2S510	#¼-20 × ⅝-Inch Long Self-Clinching Stud
A040247-01	Handle Assembly Frame—includes:
040243-01	Modified Bearing
040556-01	Frame Handle Weldment
A040251-01	Steering Cover and Decal Assembly—includes:
040248-01	Cover
040382-07	Decal
A040468-01	Flight Control Harness Assembly
19-9026	5 kΩ Potentiometer
72-1206F	#2-56 × ⅜-Inch Cross-Recessed Pan-Head Machine Screw
72-8010	#10-32 × ⅝-Inch Socket-Head Cap Screw
72-8812	#8-32 × ¾-Inch Socket-Head Cap Screw
73-21206	Roll Pin
73-20807	⅛-Inch Diameter × 7/16-Inch Long Spring Roll Pin
75-048S	#8 Split-Lock Washer
75-07020	0.390-Inch I. D. Flat Washer
040091-02	Right Handle
040091-01	Left Handle
040093-01	Right Handle Cover
040093-02	Left Handle Cover
040096-01	Button
040234-01	Steering Shaft
040235-01	60-Tooth Spur Gear
040237-01	Anchor Nut
040238-01	Anchor Pin
040239-01	Steering Torsion Spring
040240-01	Stop Bumper
040241-01	Spacer Bearing
040242-01	Handle Shaft
040244-01	Spring Pin
040246-01	Handle Torsion Spring
040249-01	14-Tooth Spur Gear
040252-01	Compression Spring
040303-01	Trigger
040473-01	Jumper Wire
160026-001	SPDT Snap Switch
175002-001	0.750-Inch I. D. Large Washer
175002-004	#10 Flat Washer
176022-3604	#6-32 × ¼-Inch Self-Locking Socket-Head Cap Screw
176022-3606	#6-32 × ⅜-Inch Self-Locking Socket-Head Cap Screw
176025-3604	#6-32 × ¼-Inch Tamper-Proof Self-Locking Button-Head Cap Screw
176026-3610	#6-32 × ⅜-Inch Tamper-Proof Socket-Head Cap Screw
177010-241	#10-32 Nylock Hex Nut
178012-001	Retaining Ring for .750-Inch Diameter Shaft
178101-003	28-Tooth Spur Gear

NOTE

To ensure that the fluorescent tube starts, make sure the ground wire is firmly attached to both the ballast transformer and the steel tube bracket.

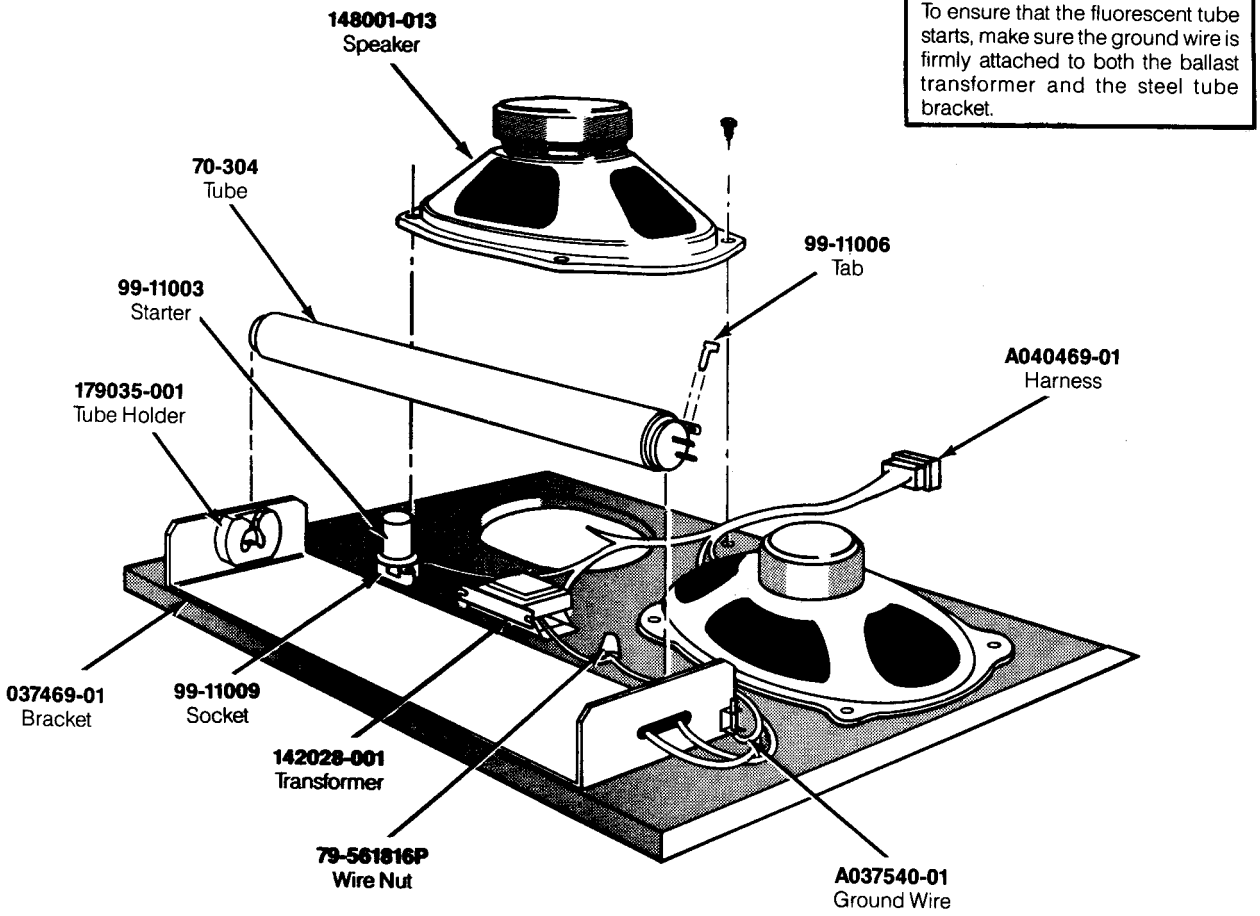

Figure 5-4 Fluorescent Tube and Speaker Assembly A040383-01 A Parts List

Part No.	Description
A037540-01	Ground Wire with Ring Lug
A040469-01	Tube and Speaker Harness Assembly
70-304	18-Inch, 15-Watt, Cool White Fluorescent Tube
79-561816P	Spring-Connector Wire Nut for 16- to 18-Gauge Wires
99-11003	Fluorescent Tube Starter
99-11006	Fluorescent Tube Locking Tab (consists of two pieces)
99-11009	Starter Socket
037469-01	Steel Tube Bracket
142028-001	60 Hz, 118 V, Ballast Transformer (used on A040378-01 assembly)
148001-013	6 x 9-Inch Oval, 4 Ω, 6-Ounce, Shielded High-Fidelity Speaker
179035-001	2-Pin Fluorescent Tube Holder

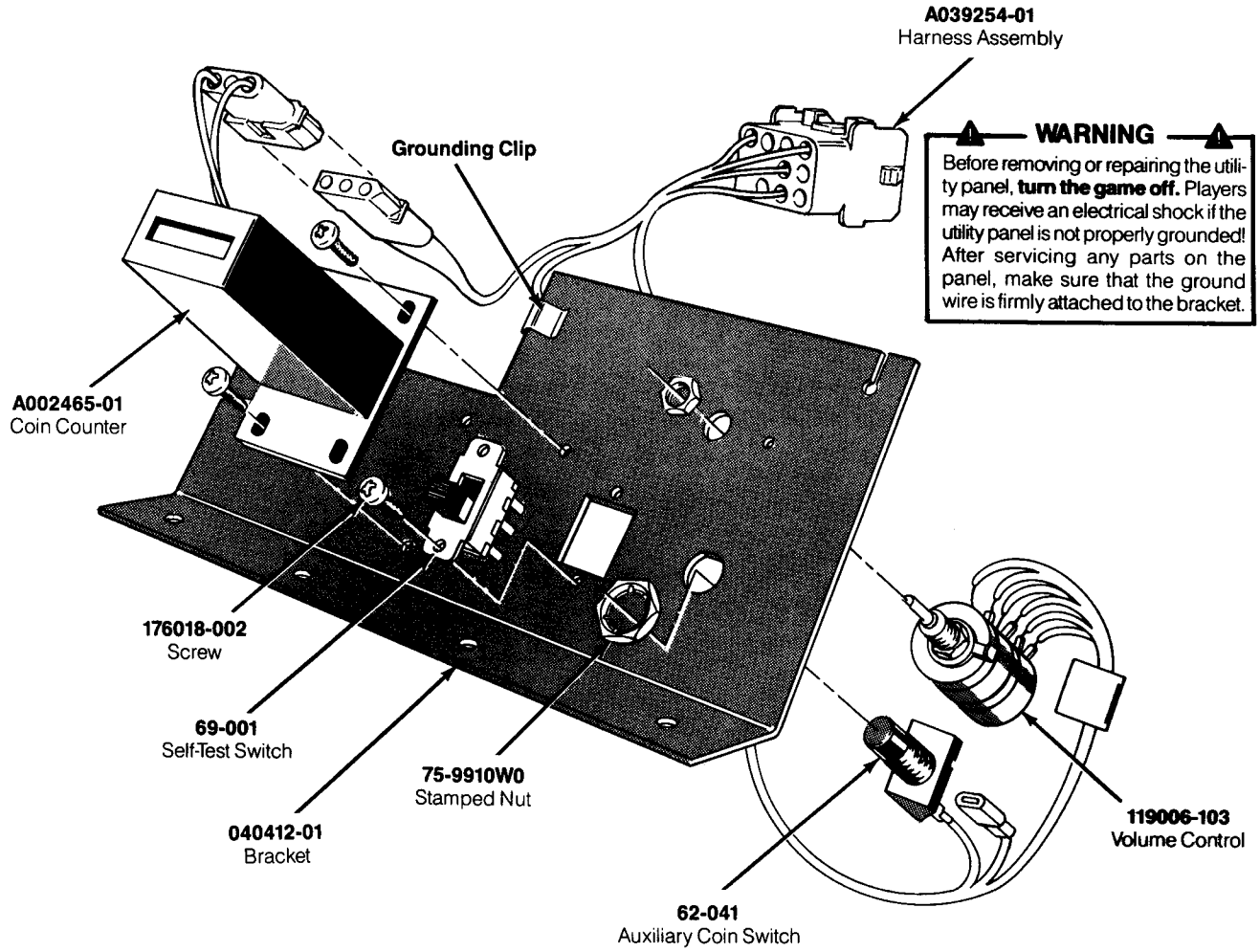

NOTE

Only the Ireland-built cabinet has two coin counters.

Figure 5-5 Utility Panel Assembly
US-Built Cabinet A040413-01 B
Ireland-Built Cabinet A040413-02 B
Parts List

Part No.	Description
A002465-01	Coin Counter
A039254-01	Volume Control Harness Assembly (includes grounding clip)
62-041	SPDT Pushbutton Auxiliary Coin Switch with Black Cap
69-001	DPDT Self-Test Switch
040412-01	Component Bracket
75-9910W0	15/32 Stamped Nut
119006-103	Volume Control
176018-002	#6-32 x ½-Inch Machine Screw

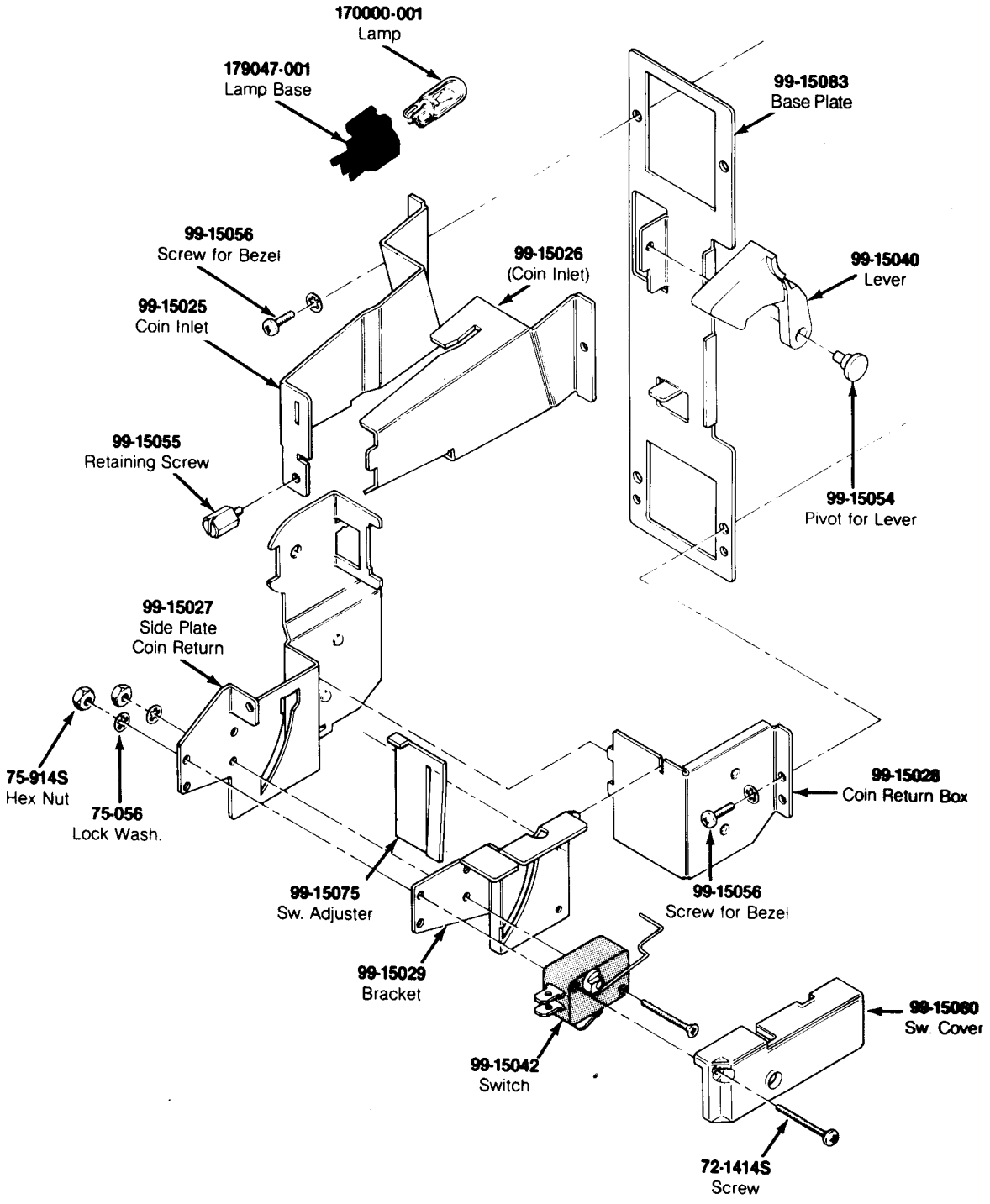

Figure 5-6 Vertically Mounted Coin Door
171034-xxx A

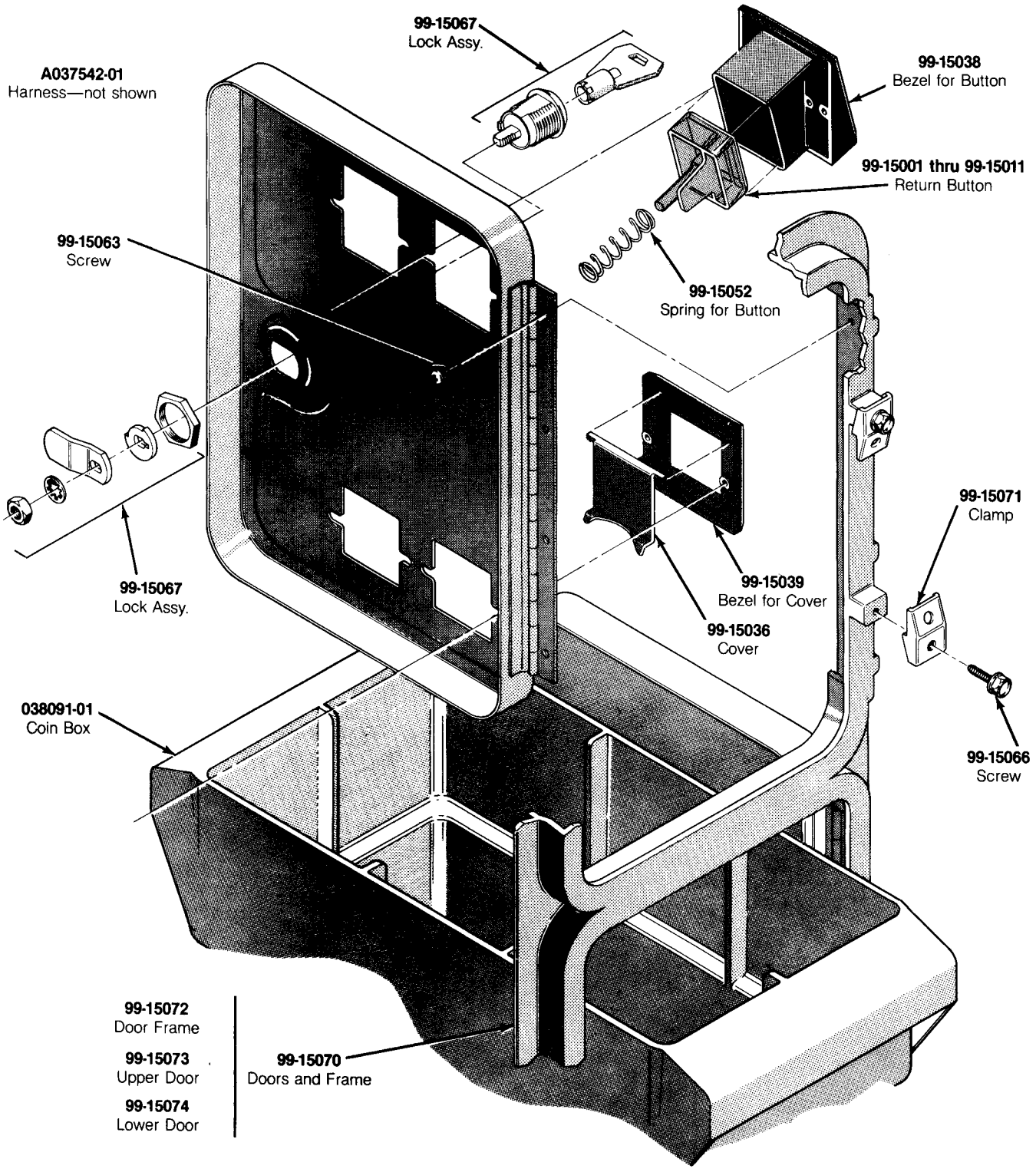

171034-001 — U.S. 25¢/25¢ Coin Door
171034-003 — Canadian 25¢/25¢ Coin Door
171034-005 — U.K. 10 P/50 P Coin Door
171034-006 — U.K. 20 P/50 P Coin Door
171034-009 — German 2 DM/1 DM Coin Door
171034-010 — German 2 DM/5 DM Coin Door
171034-011 — German 1 DM/5 DM Coin Door
171034-015 — French 2 Fr/1 Fr Coin Door

Figure 5-6 Vertically Mounted Coin Door, continued
171034-xxx A

Vertically Mounted Coin Door Assembly
Parts List

Part No.	Description
A036597-01	Harness Assembly (Ireland-Built cabinet only)
A037542-01	Harness Assembly
72-1414S	#4-40 x 7/8-Inch Cross-Recessed Pan-Head Steel Machine Screw
75-056	#6 Internal-Tooth Zinc-Plated Steel Lock Washer
75-914S	#4-40 Steel Machine Hex Nut
75-3414S	#4-40 x 7/8-Inch 82° Cross-Recessed Flat-Head Steel Machine Screw
99-15001	Coin Return Button with U.S. 25-cent Price Plate
99-15002	Coin Return Button with U.S. $1 Price Plate
99-15003	Coin Return Button with German 1 DM Price Plate
99-15004	Coin Return Button with German 2 DM Price Plate
99-15005	Coin Return Button with German 5 DM Price Plate
99-15006	Coin Return Button with Belgian 5 Fr Price Plate
99-15007	Coin Return Button with French 1 Fr Price Plate
99-15008	Coin Return Button with Japanese 100 Yen Price Plate
99-15009	Coin Return Button with British 10 Pence Price Plate
99-15010	Coin Return Button with Australian 20-cent Price Plate
99-15011	Coin Return Button with Italian 100 Lire Price Plate
99-15025	Left Half of Coin Inlet
99-15026	Right Half of Coin Inlet
99-15027	Side Plate of Coin Return Box
99-15028	Base Plate of Coin Return Box
99-15029	Switch Bracket
99-15036	Metal Coin Return Cover
99-15038	Bezel for Coin Return Button
99-15039	Metal Bezel for Coin Return Button
99-15042	Coin Switch for U.S. 25 cents
99-15052	Spring for Coin Return Button
99-15055	Retaining Screw
99-15056	#4-40 x 5/16-Inch Cross-Recessed Pan-Head Steel Machine Screw
99-15060	Switch Cover
99-15063	Screw for Hinge
99-15066	Screw for Clamp
99-15067	Lock Assembly
99-15070	Doors and Frame
99-15071	Clamp for Frame
99-15072	Door Frame
99-15073	Upper Door
99-15074	Lower Door
99-15075	Switch Adjuster
99-15083	Base Plate—includes:
99-15040	Lever
99-15054	Pivot for Lever
038091-01	Coin Box—not included in assembly (Acceptable substitute is part no. A037491-01)
170000-001	6.3 V Miniature Wedge-Base Incandescent Lamp
171006-035	Metal Coin Mechanism
171050-001	Dual Entry Face Plate
179047-001	Lamp Base

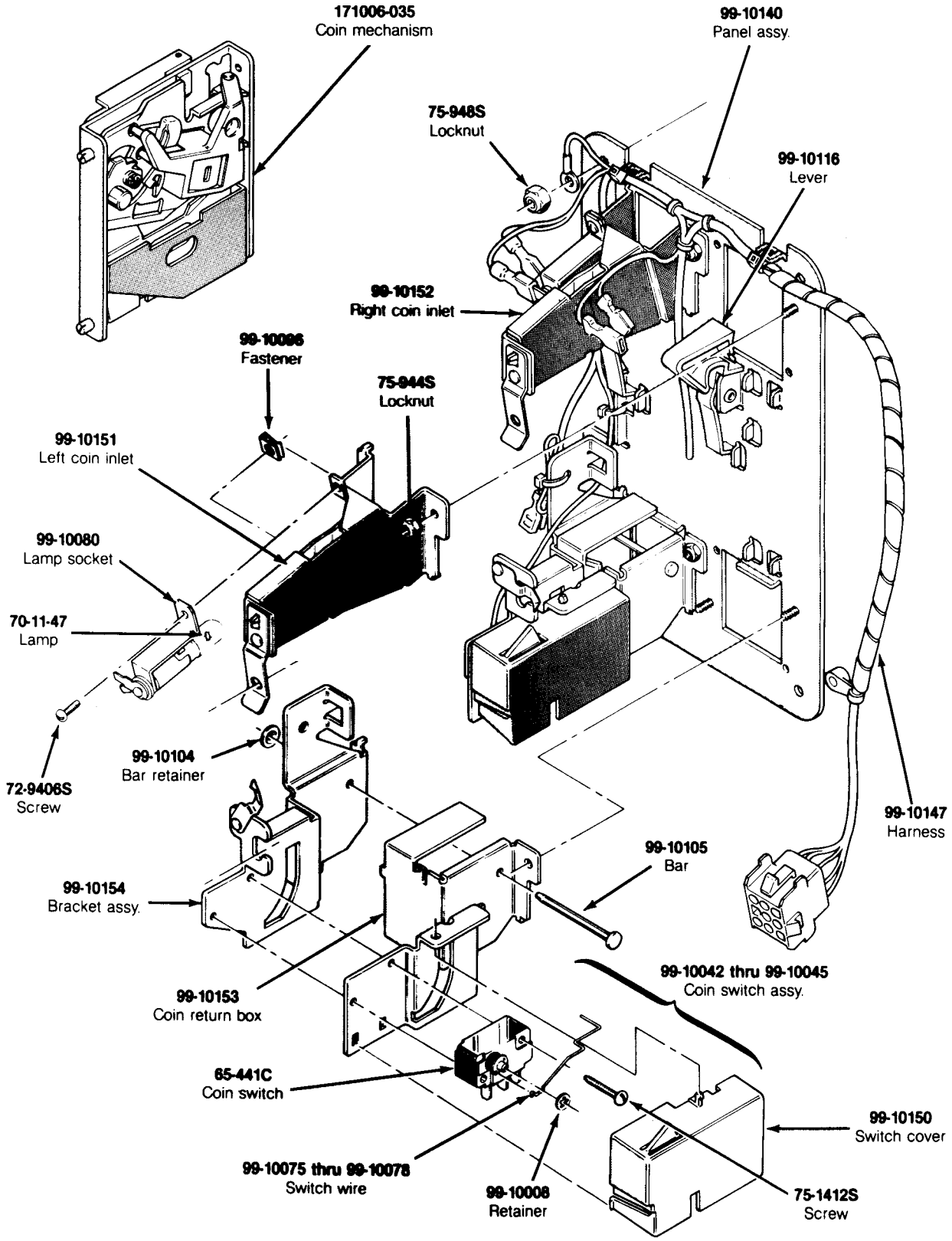

Figure 5-7 American-Made Coin-Door Assembly 171027-001 A

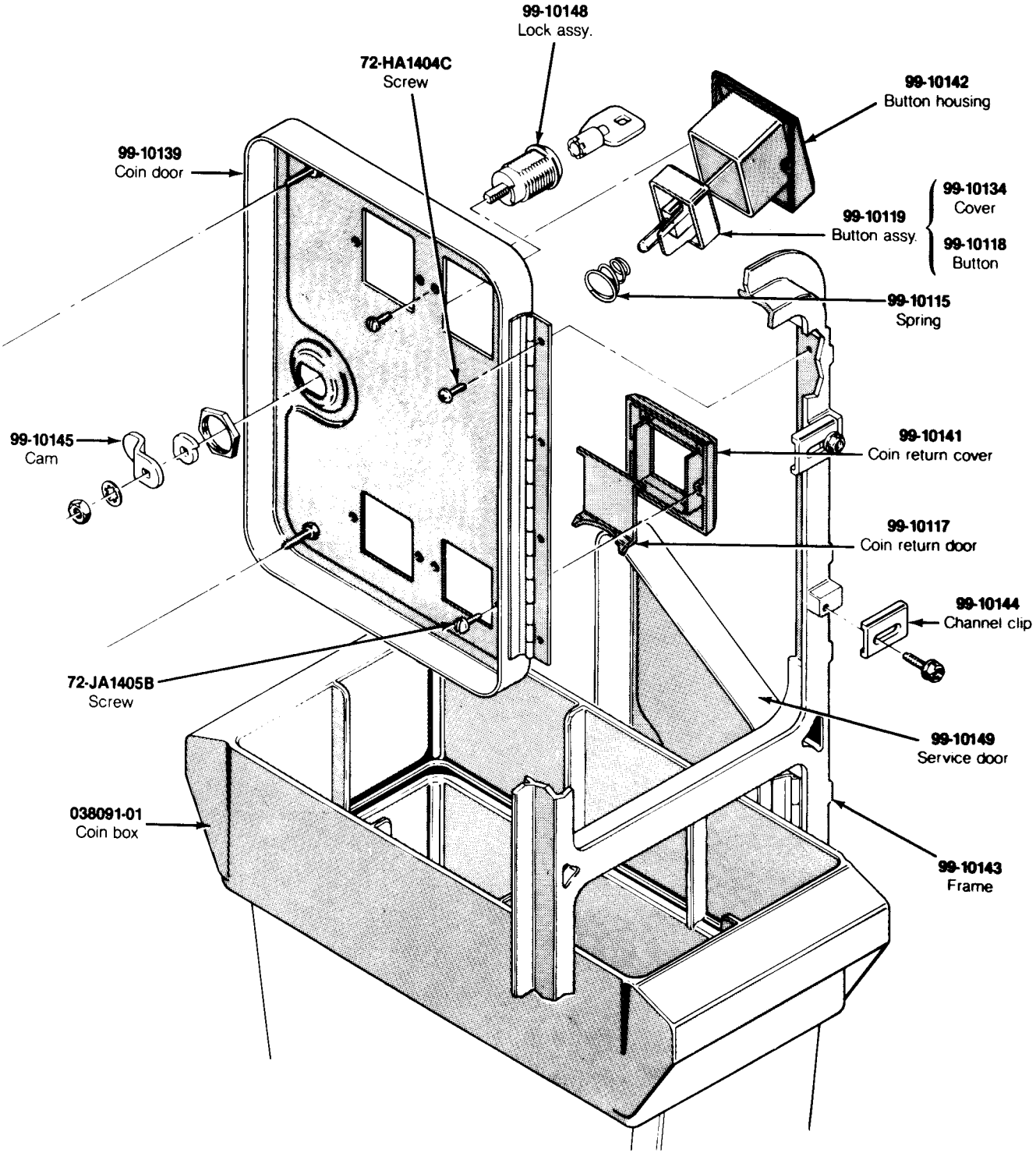

Figure 5-7 American-Made Coin-Door Assembly, continued
171027-001 A

American-Made Coin-Door Assembly
Parts List

Part No.	Description
171006-035	Metal Coin Mechanism for U.S. $.25
65-441C	Coin Switch
70-11-47	Miniature Bayonet Lamp
72-9406S	#4-40 x ⅜-Inch Truss-Head Screw
72-HA1404C	#4-40 x ¼-Inch Pan-Head Screw
72-JA1405B	#4-40 x .31-Inch Pan-Head Screw
75-1412S	#4-40 x ¾-Inch Pan-Head Screw
75-944S	#4-40 Lock Nut
99-10008	Retainer
99-10042	Coin Switch Assembly for Belgium 5 Fr and U.S. $.25
99-10043	Coin Switch Assembly for German 1 DM, Japanese 100 Yen, Swiss 1 Fr
99-10044	Coin Switch Assembly for German 2 DM, Italian 100 L, U.S. $1.00
99-10045	Coin Switch Assembly for Australian $.20, German 5 DM, British 10 P
99-10068	Coin Return Chute
99-10075	Switch wire (included in coin switch assembly)
99-10076	Switch wire (included in coin switch assembly)
99-10077	Switch wire (included in coin switch assembly)
99-10078	Switch wire (included in coin switch assembly)
99-10080	Lamp socket
99-10081	Key holder
99-10096	Fastener
99-10104	Bar retainer
99-10105	Bar
99-10115	Spring
99-10116	Plastic Coin Return Lever
99-10117	Steel Coin Return Door
99-10118	Amber Coin Return Button
99-10119	Amber Coin Button for U.S. $.25
99-10134	Coin Button Cover
99-10139	Coin Door
99-10140	Coin Door Inner-Panel Assembly
99-10141	Diecast Coin Return Cover
99-10142	Diecast Button Housing
99-10143	Coin Door Frame
99-10144	Coin Door Channel Clip
99-10145	Offset Cam
99-10146	Coin Inlet Chute Assembly
99-10147	American-Made Coin Door Harness
99-10148	Lock Assembly
99-10149	Service Door
99-10150	Switch Cover
99-10151	Left Coin Inlet
99-10152	Right Coin Inlet
99-10153	Coin Return Box
99-10154	Bracket Assembly

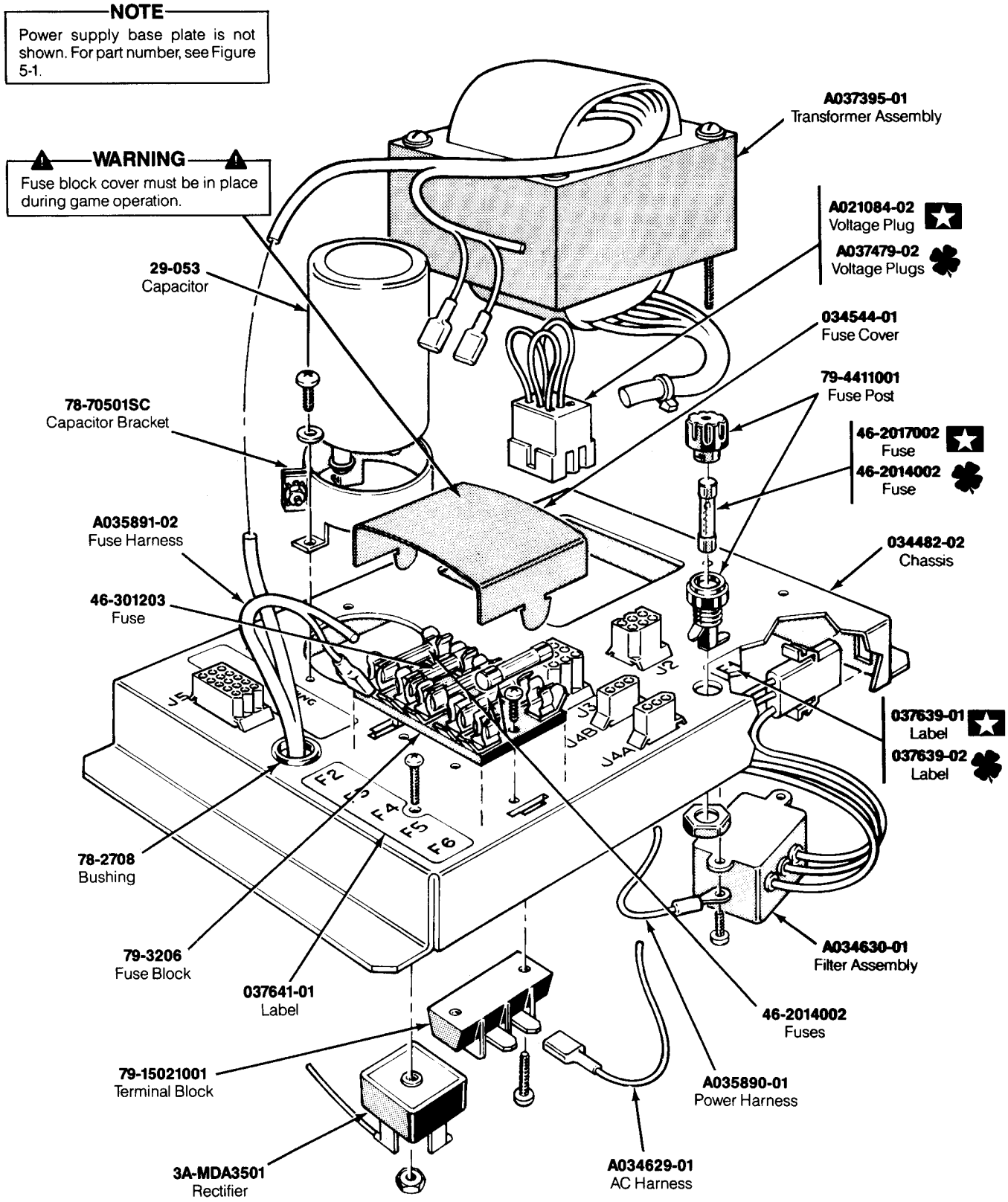

Figure 5-8 Power Supply Assembly
US-Built A037396-04 F
Ireland-Built A037396-06 F

Power Supply Assembly
Parts List

Designator	Description	Part No.
	For -04 Version	
F1	Label for Fuse Value	037639-01
F1	7 A, 250 V, 3AG Slow-Blow Glass Cartridge-Type Fuse	46-2017002
J3	Voltage Plug for 120 V (yellow wire color)	A021084-02
	For -06 Version	
F1	Label for Fuse Value	037639-02
F1	4 A, 250 V, 3AG Slow-Blow Glass Cartridge-Type Fuse	46-2014002
J3	Voltage Plugs for 220 V (blue wire color) and 240 V (brown wire color)	A037479-02
	For -04 & -06 Versions	
C1	27,000 μF, 15 VDC Electrolytic Capacitor	29-053
C1	2-Inch Diameter Capacitor Mounting Bracket	78-70501SC
CR1	Type-MDA 3501 Bridge Rectifier	3A-MDA3501
F1	Panel-Mounting Non-Indicating 3AG Cartridge-Type Fuse Post	79-4411001
F2	4 A, 250 V, 3AG Slow-Blow Glass Cartridge-Type Fuse (Acceptable substitute is part no. 46-2014001)	46-2014002
F3	20 A, 32 V, 3AG Slow-Blow Glass Cartridge-Type Fuse	46-301203
F4–F6	4 A, 250 V, 3AG Slow-Blow Glass Cartridge-Type Fuse (Acceptable substitute is part no. 46-2014001)	46-2014002
F2–F6	5-Position 3AG Fuse Block with ¼-Inch Quick-Disconnect Terminals	79-3206
F2–F6	Fuse Harness Assembly	A035891-02
F2–F6	Fuse Block Cover	034544-01
F2–F6	Label for Fuse Values	037641-01
F4	2-Circuit Single-Row Terminal Block (located under F4)	79-15021001
FL1	RFI Filter Assembly (designation not marked)	A034630-01
J2	Power Harness Assembly	A035890-01
J4A	AC Harness Assembly	A034629-01
T1	Transformer Assembly (designation covered)	A037395-01
	Nylon Type 6/6 Hole Bushing with $\frac{5}{16}$-Inch Inside Diameter x $\frac{5}{64}$-Inch Outside Diameter x ¼-Inch Thick	78-2708
	Power Supply Chassis Base	034482-02

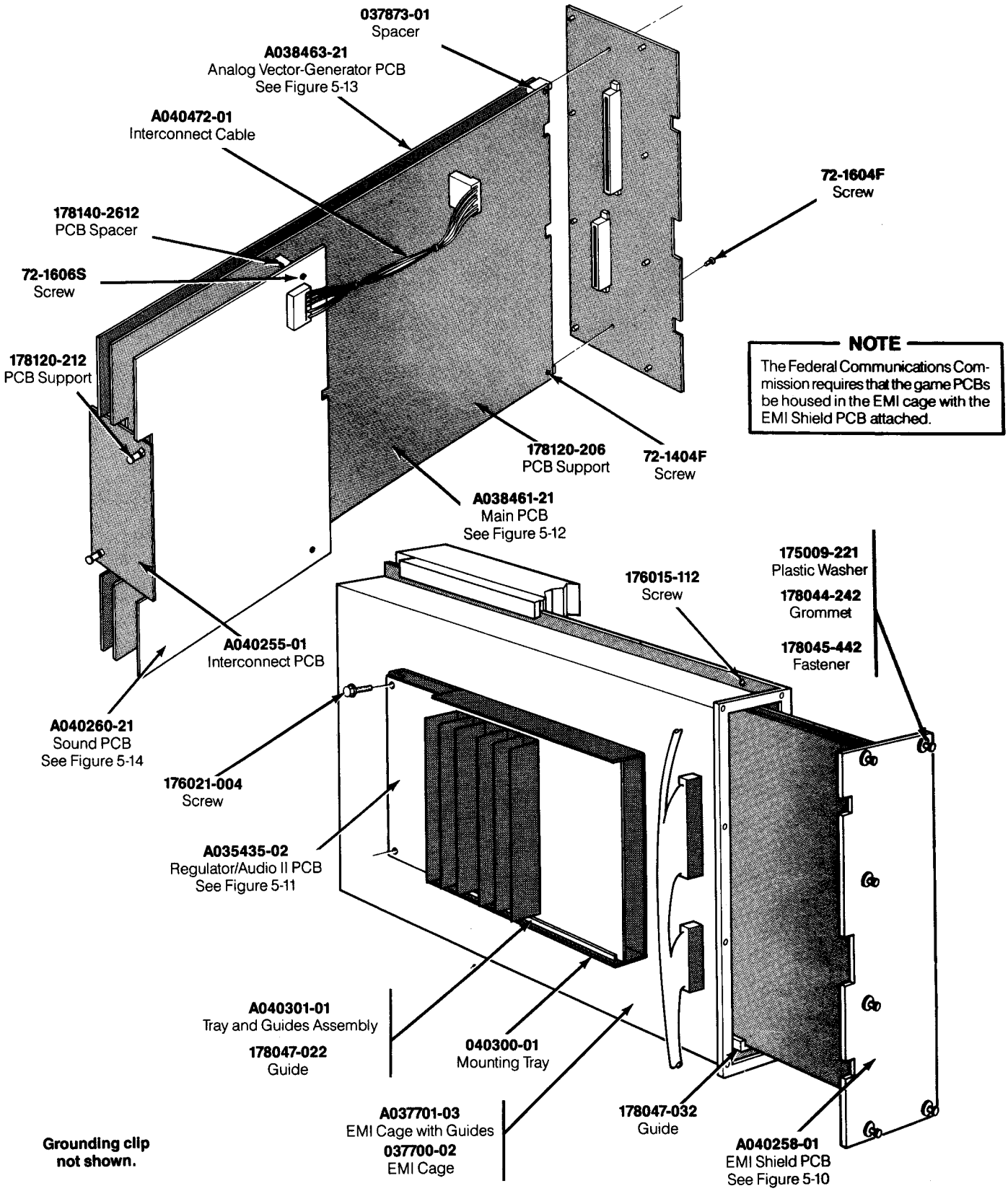

Figure 5-9A PCB Mounting Hardware US-Built Cabinet

PCB Mounting Hardware
US-Built Cabinet
Parts List

Part No.	Description
A035435-02	Regulator/Audio II PCB
A037701-03	EMI Cage and Guides Assembly—includes:
178047-032	16-Inch Snap-In PCB Guide (four required)
037700-02	EMI Cage
A038461-21	Star Wars Main PCB Assembly
A038463-21	Stars Wars Analog Vector-Generator PCB Assembly
A040255-01	Stars Wars Interconnect PCB Assembly
A040258-01	EMI Shield PCB Assembly—includes:
72-1404F	#4-40 x ¼-Inch Cross-Recessed Steel Screw
037873-01	Spacer
175009-221	Plastic Washer
178044-242	Grommet
178045-442	Snap-In Fastener
A040260-21	Stars Wars Sound PCB Assembly
A040301-01	Tray and Guides Assembly—includes:
040300-01	Mounting Tray for Regulator/Audio II PCB
178047-022	11-Inch Snap-In PCB Guide (two required)
A040472-01	Interconnect Cable
72-1604F	#6-32 x ¼-Inch Cross-Recessed Pan-Head Screw
72-1606S	#6-32 × ⅜-Inch Pan-Head Screw
176015-112	#10 x ¾-Inch Cross-Recessed Pan-Head Screw
176021-004	#8 x ¼-Inch Zinc Hex Washer-Head Screw (Acceptable substitute is part no. 176021-104)
178120-206	0.375-Inch PCB Support (located between the Main and Analog Vector-Generator PCB)
178120-212	¾-Inch PCB Support
178140-2612	¾-Inch PCB Spacer

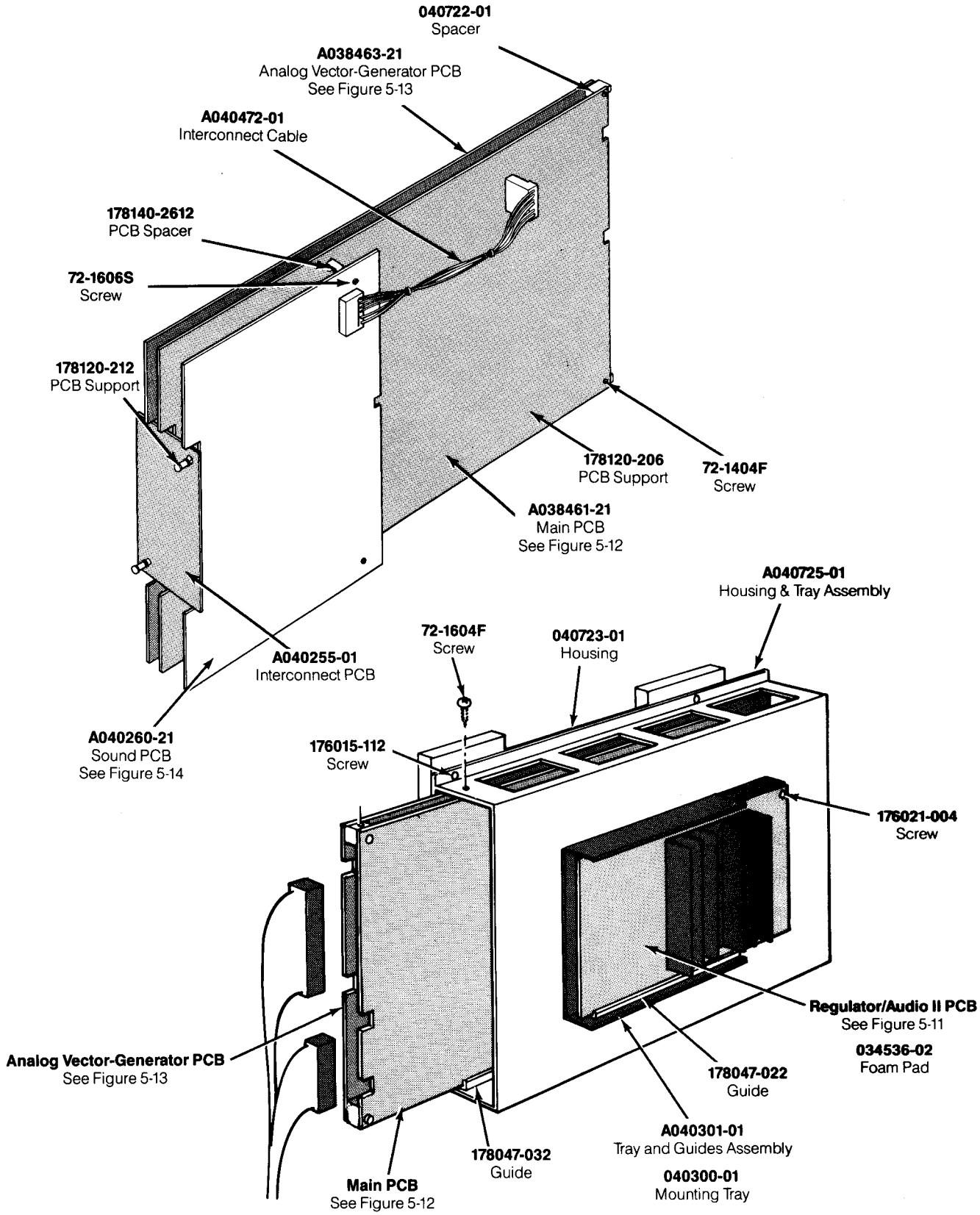

Figure 5-9B PCB Mounting Hardware
Ireland-Built Cabinet

PCB Mounting Hardware
Ireland-Built Cabinet
Parts List

Part No.	Description
A035435-02	Regulator/Audio II PCB
A038461-21	Star Wars Main PCB Assembly
A038463-21	Stars Wars Analog Vector-Generator (AVG) PCB Assembly
A040255-01	Stars Wars Interconnect PCB Assembly
A040260-21	Stars Wars Sound PCB Assembly
A040472-01	Interconnect Cable
A040725-01	Tray and Guides Assembly—includes:
A040301-01	Mounting Tray and Guides for Regulator/Audio II PCB—includes:
040300-01	Mounting Tray
178047-022	11-Inch Snap-In PCB Guide (two required)
A040724-01	PCB Guide Assembly—includes:
040723-01	PCB Housing
178047-032	16-Inch Snap-In PCB Guide (four required)
176021-004	#8 × ¼-Inch Zinc Hex Washer-Head Screw (attaches the Regulator/Audio II PCB to the mounting tray—acceptable substitute is part no. 176021-104)
72-1604F	#6-32 x ¼-Inch Cross-Recessed Pan-Head Screw
72-1606S	#6-32 × ⅜-Inch Pan-Head Screw
034536-02	Foam Pad (not shown)
040722-01	Spacer (not shown)
176015-112	#10 x ¾-Inch Cross-Recessed Pan-Head Screw
178120-206	0.375-Inch PCB Support (not shown—located between the Main and Analog Vector-Generator PCB)
178120-212	¾-Inch PCB Support
178140-2612	¾-Inch PCB Spacer

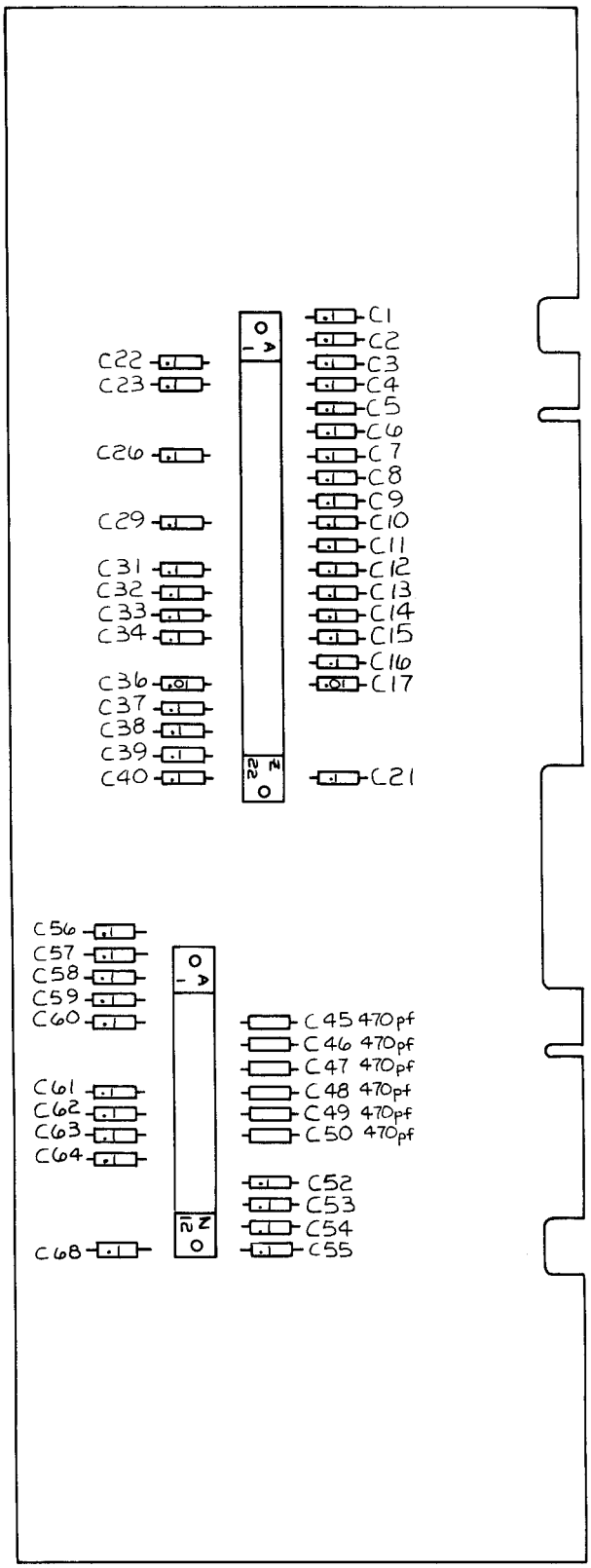

Figure 5-10 EMI Shield PCB Assembly
A040258-01 A

EMI Shield PCB Assembly
Parts List

Part No.	Description	
	Capacitors	
C1–C16	0.1 μF, +80% -20%, 50 V, Ceramic Capacitor	122002-104
C17	0.01 μF, +80% -20%, 25 V Minimum, Ceramic Axial-Lead Capacitor	122005-103
C21–C23	0.1 μF, +80% -20%, 50 V, Ceramic Capacitor	122002-104
C26	0.1 μF, +80% -20%, 50 V, Ceramic Capacitor	122002-104
C29	0.1 μF, +80% -20%, 50 V, Ceramic Capacitor	122002-104
C31–C34	0.1 μF, +80% -20%, 50 V, Ceramic Capacitor	122002-104
C36	0.01 μF, +80% -20%, 25 V Minimum, Ceramic Axial-Lead Capacitor	122005-103
C37–C40	0.1 μF, +80% -20%, 50 V, Ceramic Capacitor	122002-104
C45–C50	470 pF, 100 V, Ceramic Axial-Lead Capacitor	122016-471
C52–C64	0.1 μF, +80% -20%, 50 V, Ceramic Capacitor	122002-104
C68	0.1 μF, +80% -20%, 50 V, Ceramic Capacitor	122002-104
	Connectors	
P19	30-Pin Edge Connector (Acceptable substitute is part no. 179046-030)	179073-030
P20	44-Pin Edge Connector (Acceptable substitute is part no. 179046-044)	179073-044
	Miscellaneous	
	Spacer	037873-02
	#4-40 x ¼ Cross-Recessed Pan-Head Screw	72-1404F
	¼-Inch Grommet	178044-242
	¼-Inch White Plunger	178045-442
	Flat Nylon Washer	175009-221

CAUTION

Minimum clearance between R31 and the PCB surface should be 1/8 inch.

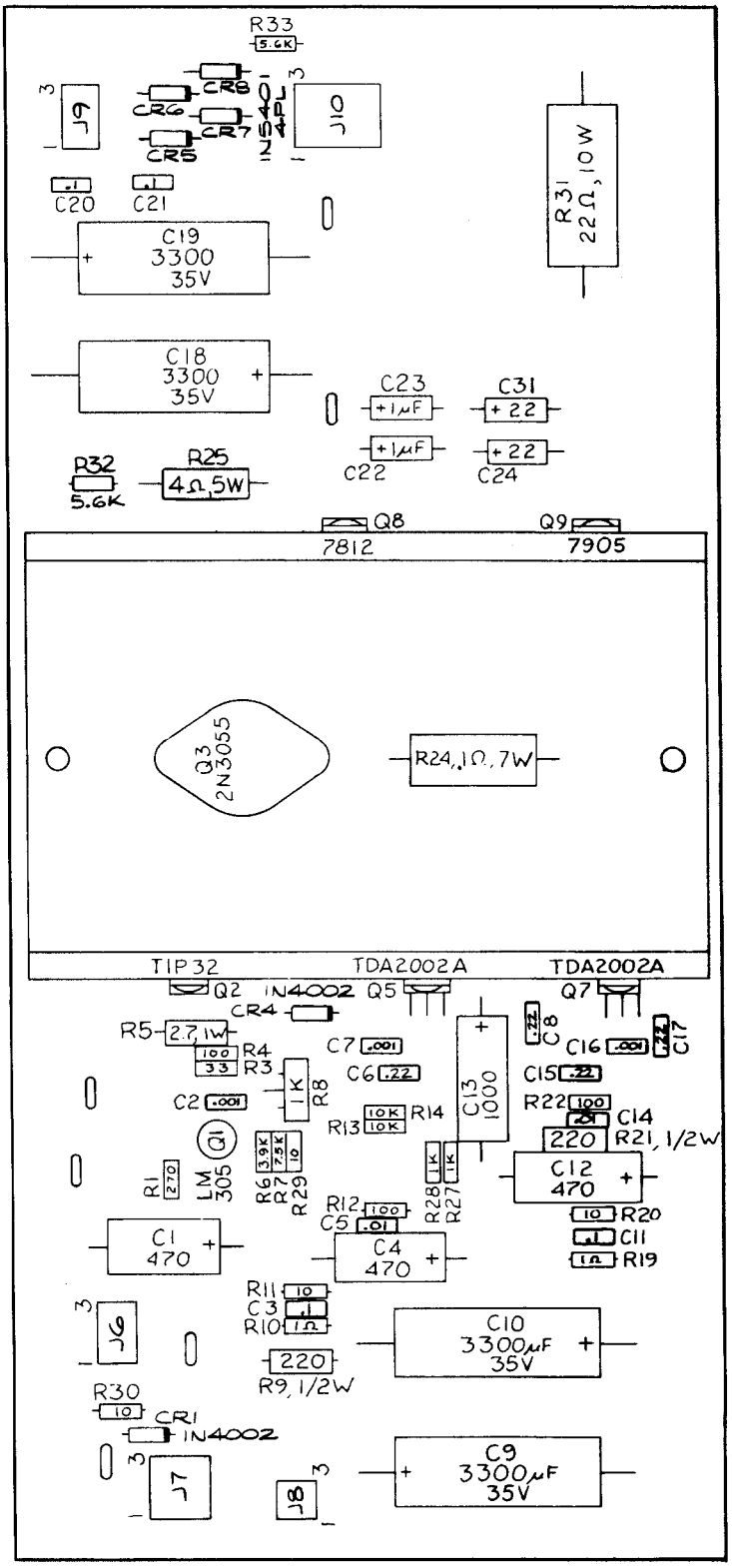

Figure 5-11 Regulator/Audio II PCB Assembly A035435-02 H

Regulator/Audio II PCB Assembly
Parts List

Designator	Description	Part No.
	Capacitors	
C1	470 µF, 25 V, Aluminum Electrolytic Fixed Axial-Lead Capacitor	24-250477
C2	0.001 µF, 35 V, Ceramic-Disc Axial-Lead Capacitor	122002-102
C3	0.1 µF, 50 V, Ceramic-Disc Axial-Lead Capacitor	122002-104
C4	470 µF, 25 V, Aluminum Electrolytic Fixed Axial-Lead Capacitor	24-250477
C5	0.01 µF, 25 V Ceramic-Disc Axial-Lead Capacitor (Acceptable substitute is part no. 122005-103)	100015-103
C6	0.22 µF, 25 V, Ceramic-Disc Axial-Lead Capacitor	122004-224
C7	0.001 µF, 35 V, Ceramic-Disc Axial-Lead Capacitor	122002-102
C8	0.22 µF, 25 V, Ceramic-Disc Axial-Lead Capacitor	122004-224
C9, C10	3300 µF, 35 V, Aluminum Electrolytic Fixed Axial-Lead Capacitor	24-350338
C11	0.1 µF, 50 V, Ceramic-Disc Axial-Lead Capacitor	122002-104
C12	470 µF, 25 V, Aluminum Electrolytic Fixed Axial-Lead Capacitor	24-250477
C13	1000 µF, 25 V, Aluminum Electrolytic Fixed Axial-Lead Capacitor	24-250108
C14	0.01 µF, 25 V Ceramic-Disc Axial-Lead Capacitor (Acceptable substitute is part no. 122005-103)	100015-103
C15	0.22 µF, 25 V, Ceramic-Disc Axial-Lead Capacitor	122004-224
C16	0.001 µF, 35 V, Ceramic-Disc Axial-Lead Capacitor	122002-102
C17	0.22 µF, 25 V, Ceramic-Disc Axial-Lead Capacitor	122004-224
C18, C19	3300 µF, 35 V, Aluminum Electrolytic Fixed Axial-Lead Capacitor	24-350338
C20, C21	0.1 µF, 50 V, Ceramic-Disc Axial-Lead Capacitor	122002-104
C22, C23	1 µF, 50 V, Aluminum Electrolytic Fixed Axial-Lead Capacitor	24-500105
C24	22 µF, 35 V, Aluminum Electrolytic Fixed Axial-Lead Capacitor	24-350226
C31	22 µF, 35 V, Aluminum Electrolytic Fixed Axial-Lead Capacitor	24-350226
	Diodes	
CR1	Type-1N4002, 1 A, 100 V Silicon Rectifier Diode	31-1N4002
CR4	Type-1N4002, 1 A, 100 V Silicon Rectifier Diode	31-1N4002
CR5–CR8	Type-1N5401, 3 A, 100 V Silicon Rectifier Diode	31-1N5401
	Resistors	
R1	270 Ω, ±5%, ¼ W Resistor	110000-271
R3	33 Ω, ±5%, ¼ W Resistor	110000-330
R4	100 Ω, ±5%, ¼ W Resistor	110000-101
R5	2.7 Ω, ±5%, 1 W Resistor	110009-027
R6	3.9 kΩ, ±5%, ¼ W Resistor	110000-392
R7	7.5 kΩ, ±5%, ¼ W Resistor	110000-752
R8	1 kΩ Vertical PCB-Mounting Cermet Potentiometer	119002-102
R9	220 Ω, ±5%, ½ W Resistor	110001-221
R10	1 Ω, ±5%, ¼ W Resistor	110000-010
R11	10 Ω, ±5%, ¼ W Resistor	110000-100
R12	100 Ω, ±5%, ¼ W Resistor	110000-101
R13, R14	10 kΩ, ±5%, ¼ W Resistor	110000-103
R20	10 Ω, ±5%, ¼ W Resistor	110000-100
R21	220 Ω, ±5%, ½ W Resistor	110001-221
R19	1 Ω, ±5%, ¼ W Resistor	110000-010
R22	100 Ω, ±5%, ¼ W Resistor	110000-101

(Continued on next page)

Regulator/Audio II PCB Assembly
Parts List, continued

Designator	Description	Part No.
R24	0.1 Ω, ±3%, 7 W Wirewound Resistor	19-100P1015
R25	4 Ω, ±5%, 5 W Wirewound Resistor	116001-040
R27, R28	1 kΩ, ±5%, ¼ W Resistor	110000-102
R29, R30	10 Ω, ±5%, ¼ W Resistor	110000-100
R31	22 Ω, ±5%, 10 W Wirewound Resistor	116000-220
R32, R33	5.6 kΩ, ±5%, ¼ W Resistor	110000-562
	Transistors	
Q2	Type-TIP32 PNP Power Transistor	33-TIP32
Q3	Type-2N3055 NPN Silicon Transistor	34-2N3055
	Miscellaneous	
J6	6-Position Connector Receptacle	79-58306
J7	9-Position Connector Receptacle	79-58308
J8	4-Position Connector Receptacle	79-58354
J9	6-Position Connector Receptacle	79-58306
J10	12-Position Connector Receptacle	79-58346
Q1	5 V Linear Voltage Regulator	37-LM305
Q2, Q9	Thermally Conductive Silicon Insulator	78-16014
Q3	Thermally Conductive Silicon Insulator	78-16008
Q5	Audio Amp TDA2002A	137151-002
Q7	Audio Amp TDA2002A	137151-002
Q8	Type-7812 +12 V Voltage Regulator	37-7812
Q9	Type-7905 −5 V Voltage Regulator	37-7905
	Heat Sink	034531-01
	Test Point (Acceptable substitute is part no. 179051-001)	179051-002

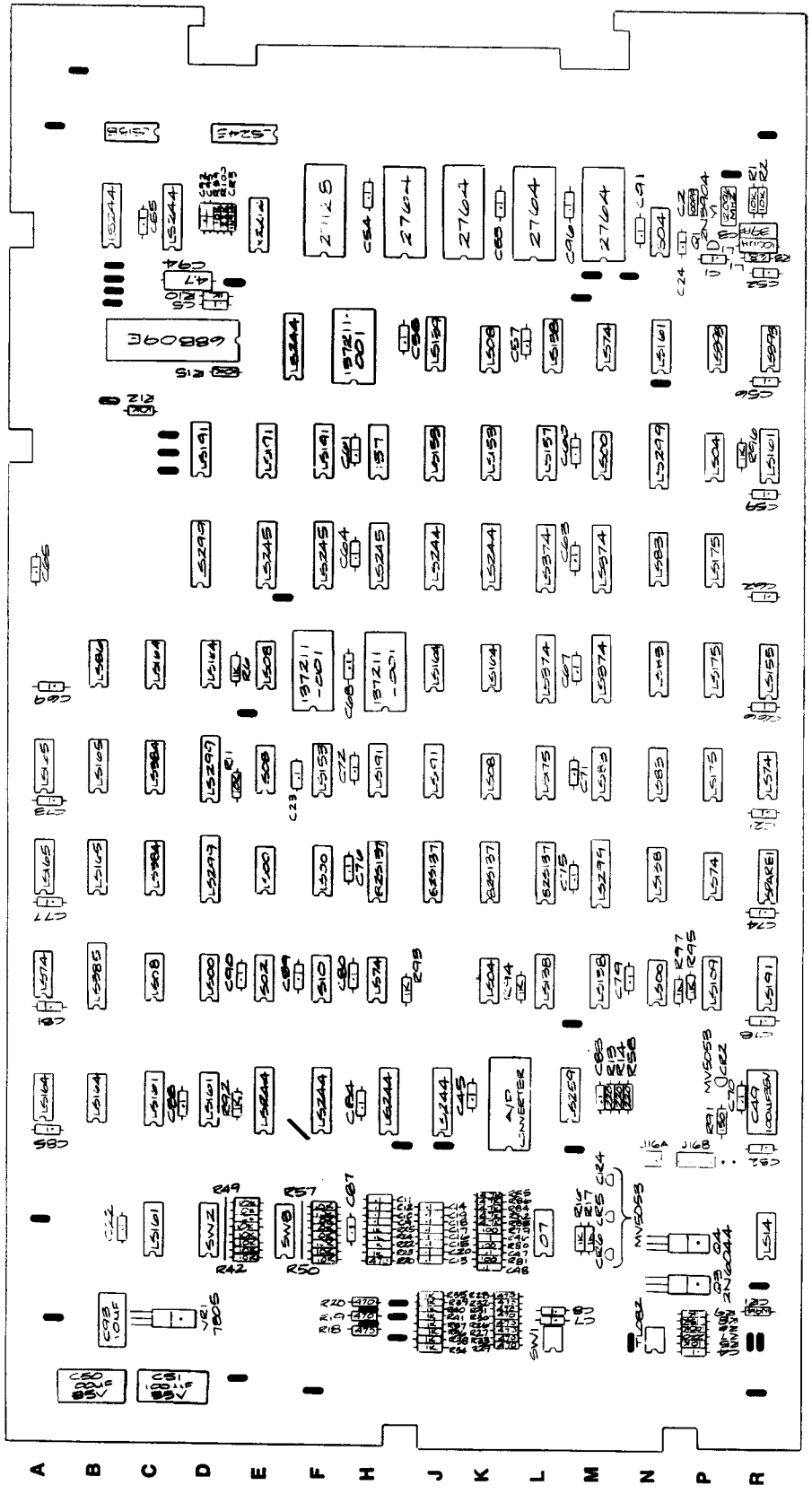

Figure 5-12 Main Printed-Circuit Board Assembly A038461-21 G

Main Printed-Circuit Board Assembly
Parts List

Designator	Description	Part No.
	Capacitors	
C1	0.1 μF, ±5%, 50 V Ceramic Capacitor	122002-104
C2	100 pF, 100 V Mica Capacitor	128002-101
C3	39 pF, 100 V Mica Capacitor	128002-390
C4–C22	0.1 μF, ±5%, 50 V Ceramic Capacitor	122002-104
C45–C48	0.1 μF, ±5%, 50 V Ceramic Capacitor	122002-104
C49–C51	0.100 μF, 35 V Electrolytic Capacitor (Acceptable substitute is part no. 124001-107)	24-350107
C52–C92	0.1 μF, ±5%, 50 V Ceramic Capacitor	122002-104
C93	0.10 μF, 35 V Electrolytic Capacitor	24-350106
C94	4.7 μF, 35 V Electrolytic Capacitor	24-500475
C95, C96	0.1 μF, ±5%, 50 V Ceramic Capacitor	122002-104
	Diodes	
CR1	Type-1N914 Diode	31-1N914
CR2	Red Light-Emitting Diode	38-MV5053
CR3	Type-1N914 Diode	31-1N914
CR4–CR6	Red Light-Emitting Diode	38-MV5053
	Integrated Circuits	
VR1	5 V Fixed Regulator Integrated Circuit	37-7805
0B/C	3-8 Line Decoder Integrated Circuit	137177-001
0D/E	Tri-State Octal Bus Transceiver Integrated Circuit	37-74LS245
1B	Line Driver/Receiver Integrated Circuit	37-74LS244
1C	Line Driver/Receiver Integrated Circuit	37-74LS244
1E	Non-Volatile RAM Integrated Circuit	137288-001
1F	300 ns EPROM Integrated Circuit	136021-114
1H/J	300 ns Tri-State EROM Integrated Circuit	136021-102
1J/K	300 ns Tri-State EROM Integrated Circuit	136021-203
1K/L	300 ns Tri-State EROM Integrated Circuit	136021-104
1M	300 ns Tri-State EROM Integrated Circuit	136021-206
1N	Quad 2-Input NOR Gate Integrated Circuit	37-74S04
2C	Microprocessor	137249-120
2E/F	Line Driver/Receiver Integrated Circuit	37-74LS244
2F/H	150 ns Tri-State Static RAM Integrated Circuit	137211-001
2J	Dual 2-4 Decoder/Multiplexer Integrated Circuit	37-74LS139
2K	Hex Inverter Integrated Circuit	37-74LS08
2L	3-8 Line Decoder Integrated Circuit	137177-001
2M	Dual D-Type Flip-Flop Integrated Circuit	37-74LS74
2N	4-Bit Counter Integrated Circuit	37-74LS161
2P	Dual 4-Bit Bin Counter Integrated Circuit	37-74LS393
2R	Dual 4-Bit Bin Counter Integrated Circuit	37-74LS393
3D	Up-Down Counter Integrated Circuit	37-74LS191
3E	Up-Down Counter Integrated Circuit	37-74LS191

(continued on next page)

Main Printed-Circuit Board Assembly
Parts List, continued

Designator	Description	Part No.
3F	Up-Down Counter Integrated Circuit	37-74LS191
3H	Quad Data Selector/Multiplexer Integrated Circuit	37-74LS157
3J	Data Selector/Multiplexer Integrated Circuit	37-74LS153
3K	Data Selector/Multiplexer Integrated Circuit	37-74LS153
3L	Quad Data Selector/Multiplexer Integrated Circuit	37-74LS157
3M	Type-74LS00 Integrated Circuit	37-74LS00
3N	Shift/Storage Register Integrated Circuit	137180-001
3P	Quad 2-Input NOR Gate Integrated Circuit	37-74LS04
3R	4-Bit Counter Integrated Circuit	37-74LS161
4D	Shift/Storage Register Integrated Circuit	137180-001
4E	Tri-State Octal Bus Transceiver Integrated Circuit	37-74LS245
4F	Tri-State Octal Bus Transceiver Integrated Circuit	37-74LS245
4H	Tri-State Octal Bus Transceiver Integrated Circuit	37-74LS245
4J	Line Driver/Receiver Integrated Circuit	37-74LS244
4K	Line Driver/Receiver Integrated Circuit	37-74LS244
4L, 5L	Octal D-Type Flip-Flop Integrated Circuit	37-74LS374
4M, 5M	Octal D-Type Flip-Flop Integrated Circuit	37-74LS374
4N–6N	4-Bit Counter Integrated Circuit	37-74LS83
4P–6P	Quad D-Type Flip-Flop Integrated Circuit	37-74LS175
5B	Quad Exclusive OR Integrated Circuit	37-74LS86
5C	8-Bit Register Counter Integrated Circuit	37-74LS164
5D	8-Bit Register Counter Integrated Circuit	37-74LS164
5E, 6E	Hex Inverter Integrated Circuit	37-74LS08
5F	150 ns Tri-State Static RAM Integrated Circuit	137211-001
5H	150 ns Tri-State Static RAM Integrated Circuit	137211-001
5J	8-Bit Register Counter Integrated Circuit	37-74LS164
5K	8-Bit Register Counter Integrated Circuit	37-74LS164
5R	Dual 1-of-4 Decoder/Multiplexer Integrated Circuit	137221-001
6A	8-Bit Register Counter Integrated Circuit	37-74LS165
6B	8-Bit Register Counter Integrated Circuit	37-74LS165
6C, 7C	Two's-Complement, Serial Multiplexer Integrated Circuit	137182-001
6D, 7D	Shift/Storage Register Integrated Circuit	137180-001
6F	Data Selector/Multiplexer Integrated Circuit	37-74LS153
6H	Up-Down Counter Integrated Circuit	37-74LS191
6J	Up-Down Counter Integrated Circuit	37-74LS191
6K	Hex Inverter Integrated Circuit	37-74LS08
6L	Quad D-Type Flip-Flop Integrated Circuit	37-74LS175
6M	4-Bit Counter Integrated Circuit	37-74LS83
6R	Dual D-Type Flip-Flop Integrated Circuit	37-74LS74
7A	8-Bit Register Counter Integrated Circuit	37-74LS165
7B	8-Bit Register Counter Integrated Circuit	37-74LS165
7E	Type-74LS00 Integrated Circuit	37-74LS00
7F	Type-74LS00 Integrated Circuit	37-74LS00
7H	ROM Integrated Circuit	136021-110

(continued on next page)

Main Printed-Circuit Board Assembly Parts List, continued

Designator	Description	Part No.
7J	ROM Integrated Circuit	136021-111
7K	ROM Integrated Circuit	136021-112
7L	ROM Integrated Circuit	136021-113
7M	Shift/Storage Register Integrated Circuit	137180-001
7N	3-8 Line Decoder Integrated Circuit	137177-001
7P	Dual D-Type Flip-Flop Integrated Circuit	37-74LS74
8A	Dual D-Type Flip-Flop Integrated Circuit	37-74LS74
8B	Quad Serial Adder/Subtractor Integrated Circuit	137181-001
8C	Hex Inverter Integrated Circuit	37-74LS08
8D	Type-74LS00 Integrated Circuit	37-74LS00
8E	Quad 2-Input NOR Gate Integrated Circuit	37-74S02
8F	Triple 3-Input NAND Gate Integrated Circuit	137236-001
8H	Dual D-Type Flip-Flop Integrated Circuit	37-74LS74
8K	Quad 2-Input NOR Gate Integrated Circuit	37-74LS04
8L	3-8 Line Decoder Integrated Circuit	137177-001
8M	3-8 Line Decoder Integrated Circuit	137177-001
8N	Type-74LS00 Integrated Circuit	37-74LS00
8P	Dual J-K Flip-Flop Integrated Circuit	37-74LS109
8R	Up-Down Counter Integrated Circuit	37-74LS191
9A	8-Bit Register Counter Integrated Circuit	37-74LS164
9B	8-Bit Register Counter Integrated Circuit	37-74LS164
9C, 10C	4-Bit Counter Integrated Circuit	37-74LS161
9D	4-Bit Counter Integrated Circuit	37-74LS161
9E	Line Driver/Receiver Integrated Circuit	37-74LS244
9F	Line Driver/Receiver Integrated Circuit	37-74LS244
9H	Line Driver/Receiver Integrated Circuit	37-74LS244
9J	Line Driver/Receiver Integrated Circuit	37-74LS244
9K	Analog/Digital Converter Integrated Circuit	137243-001
9L/M	8-Bit Latch Integrated Circuit	37-74LS259
10L	Hex Buffer/Driver Integrated Circuit	37-7407
10R	Hex Inverter Schmitt Trigger Integrated Circuit	37-74LS14
11N	Dual Operational Amplifier Integrated Circuit	37-TL082CP
	Resistors	
R1, R2	10 kΩ, ±5%, ¼ W Resistor	110000-103
R3	220 Ω, ±5%, ¼ W Resistor	110000-221
R4	1 kΩ, ±5%, ¼ W Resistor	110000-102
R5	10 kΩ, ±5%, ¼ W Resistor	110000-103
R6	100 kΩ, ±5%, ¼ W Resistor	110000-104
R7	220 Ω, ±5%, ¼ W Resistor	110000-221
R8	15 kΩ, ±5%, ¼ W Resistor	110000-153
R9, R10	1 kΩ, ±5%, ¼ W Resistor	110000-102
R11, R12	10 kΩ, ±5%, ¼ W Resistor	110000-103
R13, R14	220 Ω, ±5%, ¼ W Resistor	110000-221
R15	10 kΩ, ±5%, ¼ W Resistor	110000-103

(continued on next page)

Main Printed-Circuit Board Assembly
Parts List, continued

Designator	Description	Part No.
R16, R17	1 kΩ, ±5%, ¼ W Resistor	110000-102
R18–R21	470 Ω, ±5%, ¼ W Resistor	110000-471
R22–R25	1 kΩ, ±5%, ¼ W Resistor	110000-102
R26–R33	470 Ω, ±5%, ¼ W Resistor	110000-471
R34-R41	1 kΩ, ±5%, ¼ W Resistor	110000-102
R42–R57	10 kΩ, ±5%, ¼ W Resistor	110000-103
R58	220 Ω, ±5%, ¼ W Resistor	110000-221
R79–R81	100 Ω, ±5%, ¼ W Resistor	110000-101
R82–R86	4.7 kΩ, ±5%, ¼ W Resistor	110000-472
R91	150 Ω, ±5%, ¼ W Resistor	110000-151
R92-R97	1 kΩ, ±5%, ¼ W Resistor	110000-102
R100	22 kΩ, ±5%, ¼ W Resistor	110000-223
	Sockets	
1E	18 Contact, Medium-Insertion-Force IC Socket	79-42C18
1F	28 Contact, Medium-Insertion-Force IC Socket	79-42C28
1H/J	28 Contact, Medium-Insertion-Force IC Socket	79-42C28
1J/K	28 Contact, Medium-Insertion-Force IC Socket	79-42C28
1K/L	28 Contact, Medium-Insertion-Force IC Socket	79-42C28
1M	28 Contact, Medium-Insertion-Force IC Socket	79-42C28
2C	40 Contact, Medium-Insertion-Force IC Socket	79-42C40
2F/H	24 Contact, Medium-Insertion-Force IC Socket	79-42C24
5F	24 Contact, Medium-Insertion-Force IC Socket	79-42C24
5H	24 Contact, Medium-Insertion-Force IC Socket	79-42C24
7H	18 Contact, Medium-Insertion-Force IC Socket	79-42C18
7J	18 Contact, Medium-Insertion-Force IC Socket	79-42C18
7K	18 Contact, Medium-Insertion-Force IC Socket	79-42C18
7L	18 Contact, Medium-Insertion-Force IC Socket	79-42C18
9K	28 Contact, Medium-Insertion-Force IC Socket	79-42C28
	Switches	
10D	8-Toggle DIP Switch	66-118PIT
10E	8-Toggle DIP Switch	66-118PIT
11L	4-Toggle DIP Switch	66-114PIT
	Transistors	
Q1	Type-2N3904 Transistor	34-2N3904
Q3, Q4	Type-2N6044 Transistor	34-2N6044
	Miscellaneous	
	Test Point Acceptable substitute is part no. 020670-01	179051-002
L1	100 μH, ±5%, Fixed RF Inductor Acceptable substitute is part no. 141002-001	41-3003
J16A	2-Contact Header Connector	79-58255
J16B	4-Contact Header Connector	79-58331
Q3	Nylon Snap-In Fastener	81-4302
Q4	Nylon Snap-In Fastener	81-4302
VR1	Nylon Snap-In Fastener	81-4302
Y1	12.096-MHz Crystal	144000-001

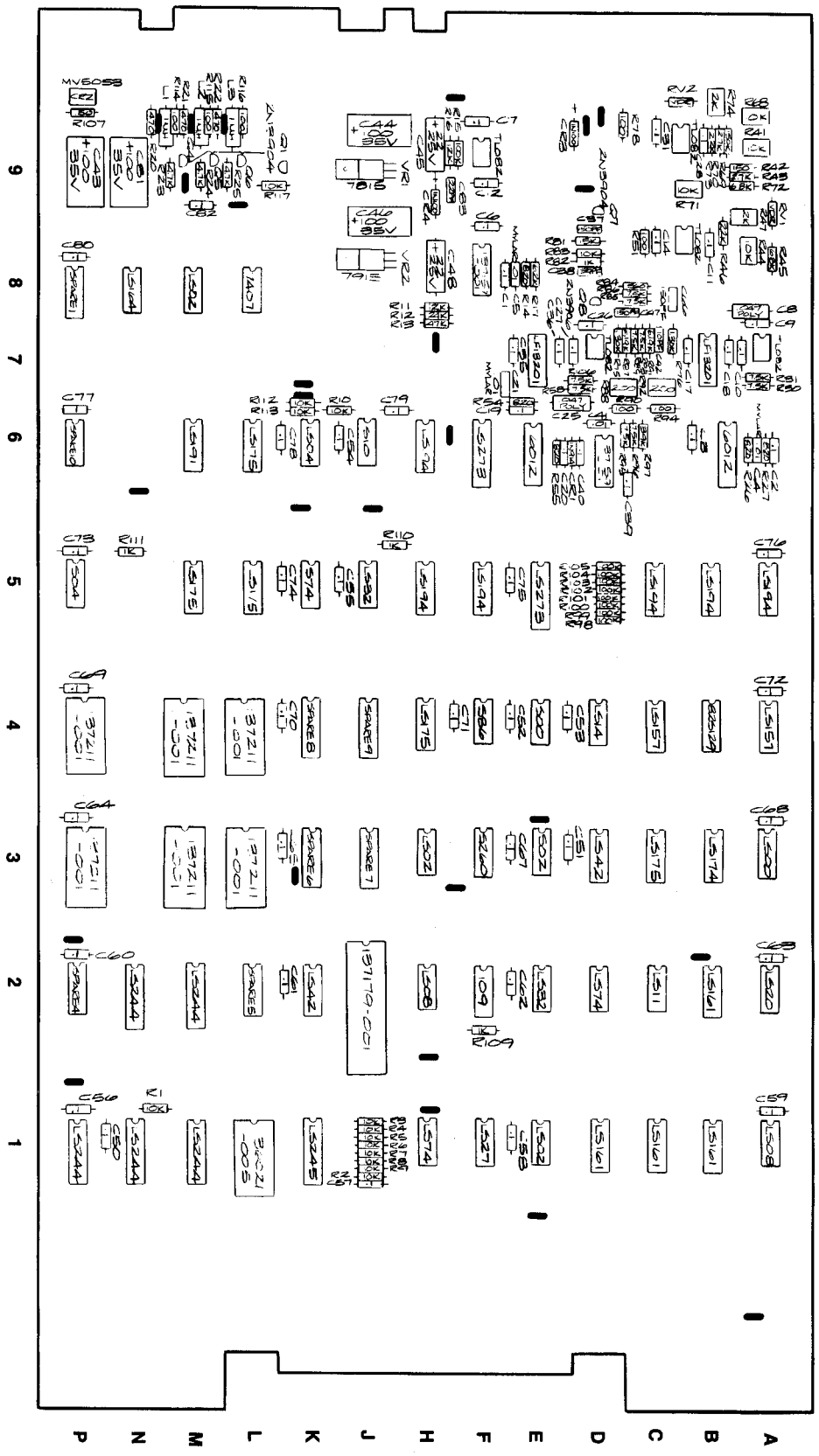

Figure 5-13 Analog Vector-Generator (AVG) PCB Assembly A038463-21 D

Analog Vector-Generator (AVG) PCB Assembly
Parts List

Designator	Description	Part No.
	Capacitors	
C1–C3	0.1 μF, +80% -20%, 50 V Ceramic Capacitor	122002-104
C4, C5	0.01 μF, 100 V Mylar Capacitor	21-101103
C6, C7	0.1 μF, +80% -20%, 50 V Ceramic Capacitor	122002-104
C8	0.047 μF, ±10%, 50 V Polycarb Axial-Lead Capacitor	122010-473
C9–C12	0.1 μF, +80% -20%, 50 V Ceramic Capacitor	122002-104
C14	0.1 μF, +80% -20%, 50 V Ceramic Capacitor	122002-104
C17–C20	0.1 μF, +80% -20%, 50 V Ceramic Capacitor	122002-104
C21	0.01 μF, 100 V Mylar Capacitor	21-101103
C25	0.047 μF, ±10%, 50 V Polycarb Axial-Lead Capacitor	122010-473
C26–C28	0.1 μF, +80% -20%, 50 V Ceramic Capacitor	122002-104
C31	0.1 μF, +80% -20%, 50 V Ceramic Capacitor	122002-104
C35, C36	0.1 μF, +80% -20%, 50 V Ceramic Capacitor	122002-104
C37	150 pF, 100 V Minimum, Dipped, Fixed Mica Capacitor	128002-151
C38	39 pF, 100 V Minimum, Dipped, Fixed Mica Capacitor	128002-390
C39, C40	0.1 μF, +80% -20%, 50 V Ceramic Capacitor	122002-104
C41	0.01 μF, 25 V Ceramic Capacitor	122005-103
C42	10 pF, 100 V Minimum, Dipped, Fixed Mica Capacitor	128002-100
C43, C44	100 μF, 35 V, Aluminum Electrolytic Axial-Lead Capacitor	24-350107
C45	22 μF, 25 V, Aluminum Electrolytic Axial-Lead Capacitor	24-250226
C46	100 μF, 35 V, Aluminum Electrolytic Axial-Lead Capacitor	24-350107
C47	150 pF, 100 V Minimum, Dipped, Fixed Mica Capacitor	128002-151
C48	22 μF, 25 V, Aluminum Electrolytic Axial-Lead Capacitor	24-250226
C50–C65	0.1 μF, +80% -20%, 50 V Ceramic Capacitor	122002-104
C66	150 pF, 100 V Minimum, Dipped, Fixed Mica Capacitor	128002-151
C67–C80	0.1 μF, +80% -20%, 50 V Ceramic Capacitor	122002-104
C81	100 μF, 35 V, Aluminum Electrolytic Axial-Lead Capacitor	24-350107
C82	0.1 μF, +80% -20%, 50 V Ceramic Capacitor	122002-104
C83	22 pF, 100 V Minimum, Dipped, Fixed Mica Capacitor	128002-220
	Coils	
L1–L3	830 mA, 0.29 Ω, ±10%, 1.0 μH, Peaking Coil Inductor	141007-001
	Diodes	
CR1	Type-1N914 Diode	31-1N914
CR2	Type-MV5053 Red Light-Emitting Diode	38-MV5053
CR3, CR4	Type-1N100 Diode	31-1N100
	Integrated Circuits	
1A	Quad 2-Input AND Gate Integrated Circuit	37-74LS08
1B	4-Bit Counter Integrated Circuit	37-74LS161
1C	4-Bit Counter Integrated Circuit	37-74LS161
1D	4-Bit Counter Integrated Circuit	37-74LS161
1E	Quad 2-Input NOR Gate Integrated Circuit	37-74LS02
1F	Triple 3-Input NOR Gate Integrated Circuit	37-74LS27
1H	Dual D-Type Flip-Flop Integrated Circuit	37-74LS74
1K	Tri-State Octal Bus Transceiver Integrated Circuit	37-74LS245

(continued on next page)

Analog Vector-Generator (AVG) PCB Assembly
Parts List, continued

Designator	Description	Part No.
1L	Read-Only Memory Integrated Circuit	136021-105
1M	Line Driver/Receiver Integrated Circuit	37-74LS244
1N	Line Driver/Receiver Integrated Circuit	37-74LS244
1P	Line Driver/Receiver Integrated Circuit	37-74LS244
2A	Dual 4-Input NAND Gate Integrated Circuit	37-74LS20
2B	4-Bit Counter Integrated Circuit	37-74LS161
2C	Triple 3-Input Positive AND Gate Integrated Circuit	137149-001
2D	Dual D-Type Flip-Flop Integrated Circuit	37-74LS74
2E	Quad 2-Input OR Gate Integrated Circuit	37-74LS32
2F	Dual J-K Flip-Flop Integrated Circuit	37-74109
2H	Quad 2-Input AND Gate Integrated Circuit	37-74LS08
2J	Vector-Generator Integrated Circuit	137179-001
2K	4 to 10 Decoder Integrated Circuit	37-74LS42
2M	Line Driver/Receiver Integrated Circuit	37-74LS244
2N	Line Driver/Receiver Integrated Circuit	37-74LS244
3A	Quad 2-Input NAND Gate Integrated Circuit	37-74LS00
3B	Hex D-Type Flip-Flop Integrated Circuit	37-74LS174
3C	Quad D-Type Flip-Flop Integrated Circuit	37-74LS175
3D	4 to 10 Decoder Integrated Circuit	37-74LS42
3E	Quad 2-Input NOR Gate Integrated Circuit	37-74S02
3F	74S260 Integrated Circuit	37-74S260
3H	Quad 2-Input NOR Gate Integrated Circuit	37-74LS02
3L	150 ns Tri-State Static RAM Integrated Circuit	137211-001
3M	150 ns Tri-State Static RAM Integrated Circuit	137211-001
3P	150 ns Tri-State Static RAM Integrated Circuit	137211-001
4A	Quad Data Selector/Multiplexer Integrated Circuit	37-74LS157
4B	Read-Only Memory Integrated Circuit	136021-109
4C	Quad Data Selector/Multiplexer Integrated Circuit	37-74LS157
4D	Hex, Schmitt/Trigger Integrated Circuit	37-74LS14
4E	Quad 2-Input NAND Gate Integrated Circuit	37-74S00
4F	Quad 2-Input Exclusive-OR Gate Integrated Circuit	137002-001
4H	Quad D-Type Flip-Flop Integrated Circuit	37-74LS175
4L	150 ns Tri-State Static RAM Integrated Circuit	137211-001
4L	150 ns Tri-State Static RAM Integrated Circuit	137211-001
4M	150 ns Tri-State Static RAM Integrated Circuit	137211-001
4P	150 ns Tri-State Static RAM Integrated Circuit	137211-001
5A	Shift Register Integrated Circuit	37-74LS194
5B	Shift Register Integrated Circuit	37-74LS194
5C	Shift Register Integrated Circuit	37-74LS194
5E	Octal D-Type Flip-Flop Integrated Circuit	37-74LS273
5F	Shift Register Integrated Circuit	37-74LS194
5H	Shift Register Integrated Circuit	37-74LS194
5J	Quad 2-Input OR Gate Integrated Circuit	37-74LS32
5K	Dual D-Type Flip-Flop Integrated Circuit	37-74S74

(continued on next page)

Analog Vector-Generator (AVG) PCB Assembly
Parts List, continued

Designator	Description	Part No.
5L	Quad D-Type Flip-Flop Integrated Circuit	37-74LS175
5M	Quad D-Type Flip-Flop Integrated Circuit	37-74LS175
5P	Hex Inverter Integrated Circuit	37-74S04
6A/B	12-Bit D–A Converter, Integrated Circuit	137158-002
6D	8-Bit D–A Converter, Integrated Circuit	137159-001
6E	12-Bit D–A Converter, Integrated Circuit	137158-002
6F	Octal D-Type Flip-Flop Integrated Circuit	37-74LS273
6H	Shift Register Integrated Circuit	37-74LS194
6J	Triple 3-Input NAND Gate Integrated Circuit	137236-001
6K	Hex Inverter Integrated Circuit	37-74LS04
6L	Quad D-Type Flip-Flop Integrated Circuit	37-74LS175
6M	Up/Down Counter Integrated Circuit	37-74LS191
7A	Dual Operational Amplifier Integrated Circuit	37-TL082CP
7B	LF13201 Quad Analog Switch, Integrated Circuit	37-13201
7D	Dual Operational Amplifier Integrated Circuit	37-TL082CP
7E	LF13201 Quad Analog Switch, Integrated Circuit	37-13201
8B/C	Dual Operational Amplifier Integrated Circuit	37-TL082CP
8F	8-Bit D–A Converter, Integrated Circuit	137159-001
8L	Hex Buffer/Driver Inverter Integrated Circuit	37-7407
8M	Quad 2-Input NOR Gate Integrated Circuit	37-74LS02
8N	8-Bit Register Counter Integrated Circuit	37-74LS164
9B/C	Dual Operational Amplifier Integrated Circuit	37-TL082CP
9F	Dual Operational Amplifier Integrated Circuit	37-TL082CP
VR1	1A, 15 V, Fixed Regulator Integrated Circuit	37-7815
VR2	1A, -15 V, Fixed Regulator Integrated Circuit	37-7915
	Resistors	
R1–R10	10 kΩ, ±5%, ¼ W Resistor	110000-103
R11	12 kΩ, ±5%, ¼ W Resistor	110000-123
R12	24 kΩ, ±5%, ¼ W Resistor	110000-243
R13	47 kΩ, ±5%, ¼ W Resistor	110000-473
R14	820 Ω, ±5%, ¼ W Resistor	110000-821
R15	100 kΩ, ±5%, ¼ W Resistor	110000-104
R16	12 kΩ, ±5%, ¼ W Resistor	110000-123
R17	6.2 kΩ, ±5%, ¼ W Resistor	110000-622
R20–R22	470 Ω, ±5%, ¼ W Resistor	110000-471
R23–R25	4.7 kΩ, ±5%, ¼ W Resistor	110000-472
R26	820 Ω, ±5%, ¼ W Resistor	110000-821
R27	820 Ω, ±5%, ¼ W Resistor	110000-821
R30, R31	7.5 kΩ, ±1%, ⅛ W Resistor	110003-752
R41	10 kΩ Potentiometer	119002-103
R42	150 kΩ, ±5%, ¼ W Resistor	110000-154
R43	2.7 kΩ, ±5%, ¼ W Resistor	110000-272
R44	10 kΩ Potentiometer	119002-103
R45	6.8 kΩ, ±5%, ¼ W Resistor	110000-682
R46	22 kΩ, ±5%, ¼ W Resistor	110000-223
R47	2 kΩ Potentiometer	119002-202

(continued on next page)

Analog Vector-Generator (AVG) PCB Assembly
Parts List, continued

Designator	Description	Part No.
R51	100 Ω, ±5%, ¼ W Resistor	110000-101
R54	820 Ω, ±5%, ¼ W Resistor	110000-821
R55	820 Ω, ±5%, ¼ W Resistor	110000-821
R58	7.5 kΩ, ±1%, ⅛ W Resistor	110003-752
R68	10 kΩ Potentiometer	119002-103
R69	150 kΩ, ±5%, ¼ W Resistor	110000-154
R70	2.7 kΩ, ±5%, ¼ W Resistor	110000-272
R71	10 kΩ Potentiometer	119002-103
R72	6.8 kΩ, ±5%, ¼ W Resistor	110000-682
R73	22 kΩ, ±5%, ¼ W Resistor	110000-223
R74	2 kΩ Potentiometer	119002-202
R75, R76	1.3 kΩ, ±1%, ⅛ W Resistor	110000-132
R78	100 Ω, ±5%, ¼ W Resistor	110000-101
R81	15 kΩ, ±5%, ¼ W Resistor	110000-153
R82	1 kΩ, ±1%, ¼ W Resistor	110000-102
R83	10 kΩ, ±5%, ¼ W Resistor	110000-103
R84	560 Ω, ±5%, ¼ W Resistor	110000-561
R85, R86	7.5 kΩ, ±1%, ⅛ W Resistor	110003-752
R87	6.19 kΩ, ±1%, ⅛ W Resistor	110003-622
R88	200 Ω Potentiometer	119002-201
R89	7.5 kΩ, ±1%, ⅛ W Resistor	110003-752
R90	100 Ω, ±5%, ¼ W Resistor	110000-101
R91	6.19 kΩ, ±1%, ⅛ W Resistor	110003-622
R92	200 Ω Potentiometer	119002-201
R93	7.5 kΩ, ±1%, ⅛ W Resistor	110003-752
R94	100 Ω, ±5%, ¼ W Resistor	110000-101
R95, R96	7.5 kΩ, ±1%, ⅛ W Resistor	110003-752
R97	3.9 kΩ, ±5%, ¼ W Resistor	110000-392
R98–R105	100 kΩ, ±5%, ¼ W Resistor	110000-104
R106	7.5 kΩ, ±1%, ⅛ W Resistor	110003-752
R107	150 Ω, ±5%, ¼ W Resistor	110000-151
R109–R111	1 kΩ, ±1%, ¼ W Resistor	110000-102
R112, R113	10 kΩ, ±5%, ¼ W Resistor	110000-103
R114–R116	100 Ω, ±5%, ¼ W Resistor	110000-101
R117	10 kΩ, ±5%, ¼ W Resistor	110000-103
RV1, RV2	8 V Variable Resistor	110004-001
VR1, VR2	Nylon Snap-In Fastener	81-4302
	Sockets	
1L	24 Contact, Medium-Insertion-Force IC Socket	79-42C24
2J	40 Contact, Medium-Insertion-Force IC Socket	79-42C40
3L	24 Contact, Medium-Insertion-Force IC Socket	79-42C24
3M	24 Contact, Medium-Insertion-Force IC Socket	79-42C24
3P	24 Contact, Medium-Insertion-Force IC Socket	79-42C24
4L	24 Contact, Medium-Insertion-Force IC Socket	79-42C24
4M	24 Contact, Medium-Insertion-Force IC Socket	79-42C24
4P	24 Contact, Medium-Insertion-Force IC Socket	79-42C24
	Transistors	
Q1	Type-2N3904 Transistor	34-2N3904
Q4–Q7	Type-2N3904 Transistor	34-2N3904
Q8	Type-2N3906 Transistor	34-2N3906
	Miscellaneous	
	Test Point	179051-002

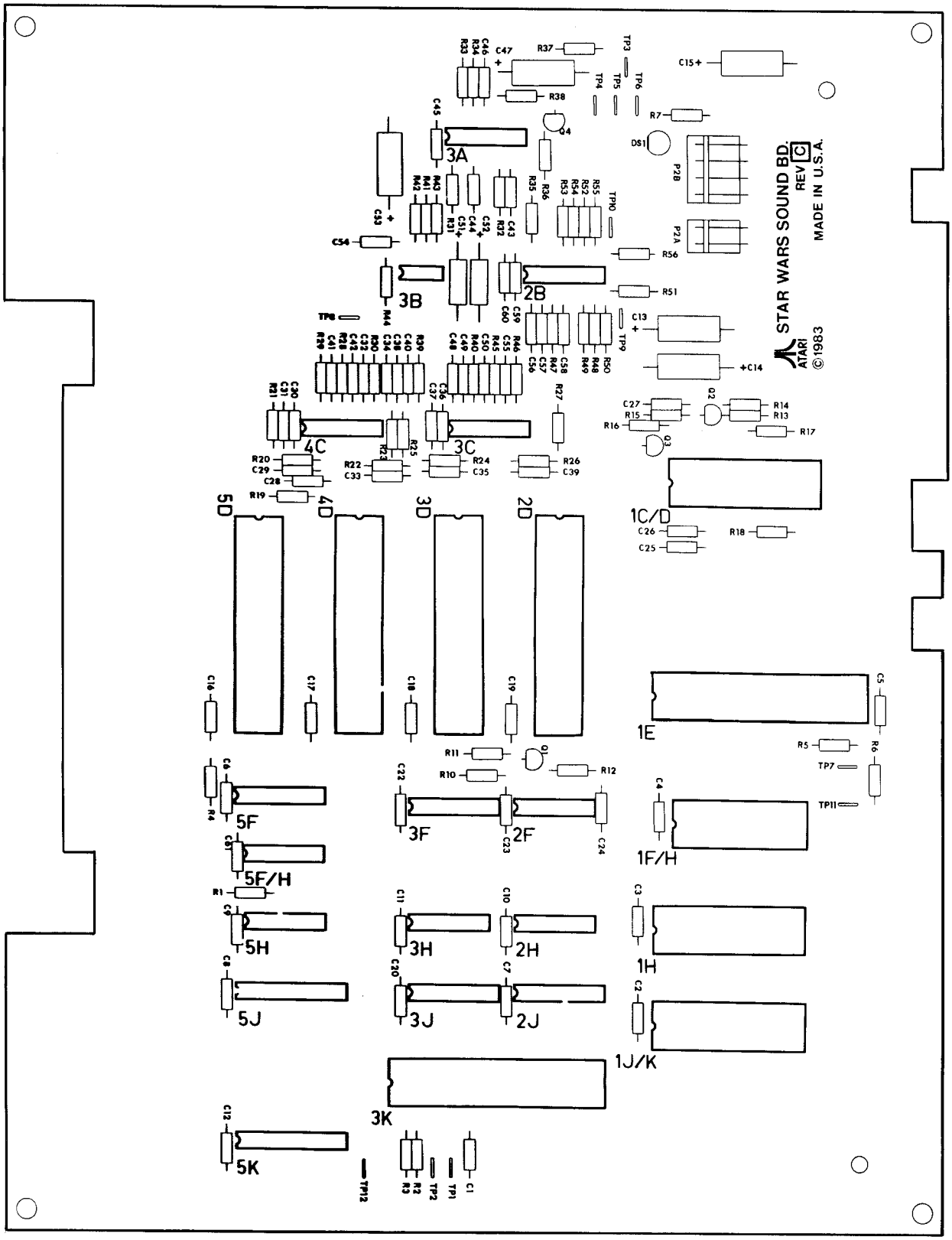

Figure 5-14 Sound PCB Assembly
A040260-21 C

Sound PCB Assembly
Parts List

Designator	Description	Part No.
	Capacitors	
C1–C12	0.1 μF, 50 V, Ceramic Capacitor	122002-104
C13–C15	100 μF, 35 V, Aluminum Electrolytic Capacitor	24-350107
C16–C20	0.1 μF, 50 V, Ceramic Capacitor	122002-104
C22–C28	0.1 μF, 50 V, Ceramic Capacitor	122002-104
C29	1000 pF, 50 V, Monolithic Ceramic Capacitor	122002-102
C30–C32	0.1 μF, 50 V, Ceramic Capacitor	122002-104
C33	1000 pF, 50 V, Monolothic Ceramic Capacitor	122002-102
C34	0.1 μF, 50 V, Ceramic Capacitor	122002-104
C35	1000 pF, 50 V, Monolothic Ceramic Capacitor	122002-102
C36–C38	0.1 μF, 50 V, Ceramic Capacitor	122002-104
C39	1000 pF, 50 V, Monolothic Ceramic Capacitor	122002-102
C40–C43	0.1 μF, 50 V, Ceramic Capacitor	122002-104
C44	0.01 μF, 25 V, Ceramic Capacitor	122005-103
C45	0.1 μF, 50 V, Ceramic Capacitor	122002-104
C46	0.0027 μF, 50 V, Ceramic Capacitor	122015-272
C47	100 μF, 35 V, Aluminum Electrolytic Capacitor	24-350107
C48–C50	0.0027 μF, 50 V, Ceramic Capacitor	122015-272
C51	0.47 μF, 50 V, Aluminum Electrolytic Axial-Lead Capacitor	124001-474
C52	10 μF, 25 V, Aluminum Electrolytic Capacitor	24-250106
C53	100 μF, 35 V, Aluminum Electrolytic Capacitor	24-350107
C54, C55	0.1 μF, 50 V, Ceramic Capacitor	122002-104
C56–C58	0.0027 μF, 50 V, Ceramic Capacitor	122015-272
C59–C61	0.1 μF, 50 V, Ceramic Capacitor	122002-104
	Connectors	
P2	4-Contact Header-Connector	179165-004
P3	2-Contact Header-Connector	179165-002
	Diodes	
DS1	Type-MV5053 Red Light-Emitting Diode	38-MV5053
	Integrated Circuits	
1C/D	Speech Synthesizer Integrated Circuit	137308-001
1E	I/O and Internal Timer Memory Integrated Circuit	90-6018
1F/H	150 ns Tri-State Static RAM Integrated Circuit	137211-001
1H	ROM Integrated Circuit	136021-208
1J/K	ROM Integrated Circuit	136021-107
2B	Quad Operational Amplifier Integrated Circuit	37-347
2D	Audio Integrated Circuit	CO12294-01
2F	Type-74C04 Integrated Circuit	137309-001
2H	Type-74LS04 Integrated Circuit	37-74LS04
2J	Type-74LS139 Integrated Circuit	37-74LS139
3A	Type-556 Integrated Circuit	37-556
3B	512 Delay Line Integrated Circuit	137310-001

(continued on next page)

Sound PCB Assembly
Parts List, continued

Designator	Description	Part No.
3C	Quad Operational Amplifier Integrated Circuit	37-347
3D	Audio Integrated Circuit	CO12294-01
3F	Type-74LS161 Integrated Circuit	37-74LS161
3H	Type-74LS00 Integrated Circuit	37-74LS00
3J	Type-74LS139 Integrated Circuit	37-74LS139
3K	Microprocessor	137249-120
4C	Quad Operational Amplifier Integrated Circuit	37-347
4D	Audio Integrated Circuit	CO12294-01
5D	Audio Integrated Circuit	CO12294-01
5F	Type-74LS161 Integrated Circuit	37-74LS161
5F/H	Type-74LS125 Integrated Circuit	137317-001
5H	Type-74LS74 Integrated Circuit	37-74LS74
5J	Type-74LS374 Integrated Circuit	37-74LS374
5K	Type-74LS374 Integrated Circuit	37-74LS374
	Resistors	
R1	1 kΩ, ±5%, ¼ W Resistor	110000-102
R2, R3	10 kΩ, ±5%, ¼ W Resistor	110000-103
R4	1 kΩ, ±5%, ¼ W Resistor	110000-102
R5, R6	10 kΩ, ±5%, ¼ W Resistor	110000-103
R7	150 Ω, ±5%, ¼ W Resistor	110000-151
R10	10 kΩ, ±5%, ¼ W Resistor	110000-103
R11	3.3 kΩ, ±5%, ¼ W Resistor	110000-332
R12	1 kΩ, ±5%, ¼ W Resistor	110000-102
R13	10 kΩ, ±5%, ¼ W Resistor	110000-103
R14	3.3 kΩ, ±5%, ¼ W Resistor	110000-332
R15	1 kΩ, ±5%, ¼ W Resistor	110000-102
R16	3.3 kΩ, ±5%, ¼ W Resistor	110000-332
R17	10 kΩ, ±5%, ¼ W Resistor	110000-103
R18	1.8 kΩ, ±5%, ¼ W Resistor	110000-182
R19	100 kΩ, ±5%, ¼ W Resistor	110000-104
R20	1 kΩ, ±5%, ¼ W Resistor	110000-102
R21	47 kΩ, ±5%, ¼ W Resistor	110000-473
R22	1 kΩ, ±5%, ¼ W Resistor	110000-102
R23	47 kΩ, ±5%, ¼ W Resistor	110000-473
R24	1 kΩ, ±5%, ¼ W Resistor	110000-102
R25	82 kΩ, ±5%, ¼ W Resistor	110000-823
R26	1 kΩ, ±5%, ¼ W Resistor	110000-102
R27	82 kΩ, ±5%, ¼ W Resistor	110000-823
R28	100 kΩ, ±5%, ¼ W Resistor	110000-104
R29	15 kΩ, ±5%, ¼ W Resistor	110000-153
R30	12 kΩ, ±5%, ¼ W Resistor	110000-123
R31, R32	560 kΩ, ±5%, ¼ W Resistor	110000-564
R33, R34	4.7 kΩ, ±5%, ¼ W Resistor	110000-472

(continued on next page)

Sound PCB Assembly
Parts List, continued

Designator	Description	Part No.
R35	2.2 kΩ, ±5%, ¼ W Resistor	110000-222
R36	15 Ω, ±5%, ¼ W Resistor	110000-150
R37	10 kΩ, ±5%, ¼ W Resistor	110000-103
R38	470 Ω, ±5%, ¼ W Resistor	110000-471
R39, R40	12 kΩ, ±5%, ¼ W Resistor	110000-123
R41	68 kΩ, ±5%, ¼ W Resistor	110000-683
R42	12 kΩ, ±5%, ¼ W Resistor	110000-123
R43	1.5 kΩ, ±5%, ¼ W Resistor	110000-152
R44	100 Ω, ±5%, ¼ W Resistor	110000-101
R45	470 kΩ, ±5%, ¼ W Resistor	110000-474
R46, R47	12 kΩ, ±5%, ¼ W Resistor	110000-123
R48, R49	22 kΩ, ±5%, ¼ W Resistor	110000-223
R50	47 kΩ, ±5%, ¼ W Resistor	110000-473
R51	2.2 kΩ, ±5%, ¼ W Resistor	110000-222
R52, R53	22 kΩ, ±5%, ¼ W Resistor	110000-223
R54, R55	47 kΩ, ±5%, ¼ W Resistor	110000-473
R56	2.2 kΩ, ±5%, ¼ W Resistor	110000-222
	Sockets	
1C/D	28-Contact, Medium-Insertion-Force Integrated Circuit Socket	79-42C28
1E	40-Contact, Medium-Insertion-Force Integrated Circuit Socket	79-42C40
1F/H	24-Contact, Medium-Insertion-Force Integrated Circuit Socket	79-42C24
1H	28-Contact, Medium-Insertion-Force Integrated Circuit Socket	79-42C28
1J/K	28-Contact, Medium-Insertion-Force Integrated Circuit Socket	79-42C28
2D	40-Contact, Medium-Insertion-Force Integrated Circuit Socket	79-42C40
3D	40-Contact, Medium-Insertion-Force Integrated Circuit Socket	79-42C40
3K	40-Contact, Medium-Insertion-Force Integrated Circuit Socket	79-42C40
4D	40-Contact, Medium-Insertion-Force Integrated Circuit Socket	79-42C40
5D	40-Contact, Medium-Insertion-Force Integrated Circuit Socket	79-42C40
	Transistors	
Q1, Q2	Type-2N3906 Transistor	33-2N3906
Q3, Q4	Type-2N3904 Transistor	34-2N3904
	Miscellaneous	
TP1–TP12	Test Point	179051-002

Glossary of Terms

AC
Alternating current; from zero it rises to a maximum positive level, then passes through zero again to a maximum negative level.

ACTIVE STATE
The true state of a signal. For example: The active state for $\overline{\text{START}}$ is low.

ADDRESS
A value that identifies a specific location of data in memory; normally expressed in hexadecimal notation.

ANALOG
Measurable in an absolute quantity (as opposed to on or off). Analog devices are volume controls, light dimmers, stereo amplifiers, etc.

ANODE
The positive (arrow) end of a diode.

AMPLIFIER
A device used to increase the strength of an applied signal.

AMPLITUDE
The maximum instantaneous value of a waveform pulse from zero.

ASTABLE
Having no normal state. An astable device will free-run or oscillate as long as operating voltage is applied. The oscillation frequency is usually controlled by external circuitry.

AUXILIARY COIN SWITCH
A momentary-contact pushbutton switch with a black cap located on the utility panel. The auxiliary coin switch adds credits to the game without activating a coin counter.

BEZEL
A cut, formed, or machined retention device, such as the conical device used to mount a pushbutton switch to a control panel, or the formed device used to frame the video display screen.

BIDIRECTIONAL
Able to send or receive data on the same line (e.g., the data bus of a microprocessor).

BINARY
A number system that expresses all values by using two digits (0 and 1).

BIT
A binary digit; expressed as 1 or 0.

BLANKING
Turning off the beam on a cathode-ray tube during retrace.

BLOCK DIAGRAM
A drawing in which functional circuitry units are represented by blocks. Very useful during initial troubleshooting.

BUFFER
1. An isolating circuit designed to eliminate the reaction of a driven circuit on the circuits driving it (e.g., a buffer amplifier).

2. A device used to supply additional drive capability.

BUS
An electrical path over which information is transferred from any of several sources to any of several destinations.

CAPACITOR
A device capable of storing electrical energy. A capacitor blocks the flow of DC current while allowing AC current to pass.

CATHODE
The negative end of a diode.

CHIP
An integrated circuit comprising many circuits on a single wafer slice.

CLOCK
A repetitive timing signal for synchronizing system functions.

COINCIDENCE
Occurring at the same time.

COIN COUNTER
A 6-digit electromechanical device that counts the coins inserted in the coin mechanism(s).

COIN MECHANISM
A device on the inside of the coin door that inspects the coin to determine if the correct coin has been inserted.

COMPLEMENTARY
Having opposite states, such as the outputs of a flip-flop.

COMPOSITE SYNC
Horizontal and vertical synchronization pulses that are bused together into a single signal. This signal provides the timing necessary to keep the display in synchronization with the game circuitry.

COMPOSITE VIDEO
Complete video signal from the game system to drive the display circuitry, usually comprising H SYNC, V SYNC, and the video.

CREDIT
One play for one person based on the game switch settings.

CRT
Cathode-ray tube.

DATA
General term for the numbers, letters, and symbols that serve as input for device processing.

DARLINGTON
A two-transistor amplifier that provides extremely high gain.

DC
Direct current, meaning current flowing in one direction and of a fixed value.

DEFLECTION YOKE
Electromagnetic coils around the neck of a cathode-ray tube. One set of coils deflects the electron beam horizontally and the other set deflects the beam vertically.

DIAGNOSTICS
A programmed routine for checking circuitry. For example: the self-test is a diagnostic routine.

DIODE
A semiconductor device that conducts in only one direction.

DISCRETE
Non-integrated components, such as resistors, capacitors, and transistors.

DMA
Direct memory access. DMA is a process of accessing memory that bypasses the microprocessor logic. DMA is normally used for transferring data between the input/output ports and memory.

DOWN TIME
The period during which a game is malfunctioning or not operating correctly due to machine failure.

EAROM
Electrically alterable read-only memory (see ROM). The EAROM is a memory that can be changed by the application of high voltage.

FLYBACK
A step-up transformer used in a display to provide the high voltage.

GATE
1. A circuit with one output that responds only when a certain combination of pulses is present at the inputs.

2. A circuit in which one signal switches another signal on and off.

3. To control the passage of a pulse or signal.

HARNESS
A prefabricated assembly of insulated wires and terminals ready to be attached to a piece of equipment.

HEXADECIMAL
A number system using the equivalent of the decimal number 16 as a base. The symbols 0–9 and A–F are usually used.

IMPLODE
To burst inward; the inward collapse of a vacuum tube.

I/O
Input/Output.

IRQ
Interrupt request. IRQ is a control signal to the microprocessor that is generated by external logic. This signal tells the microprocessor that external logic needs attention. Depending on the program, the processor may or may not respond.

LED
The abbreviation for a light-emitting diode.

LOCKOUT COIL
Directs coins into the coin return box when there is no power to the game.

LOGIC STATE
The binary (1 or 0) value at the node of a logic element or integrated circuit during a particular time. Also called the logic level. The list below shows the voltage levels corresponding to the logic states (levels) in a TTL system.

Logic 0, Low = 0 VDC to +0.8 VDC

Grey Area (Tri-State Level) =
+0.8 VDC to +2.4 VDC

Logic 1, High =
+2.4 VDC to +5 VDC

MULTIPLEXER
A device that takes several low-speed inputs and combines them into one high-speed data stream for simultaneous transmission on a single line.

NMI
Non-maskable interrupt. NMI is a request for service by the microprocessor from external logic. The microprocessor cannot ignore this interrupt request.

PAGE
A subsection of memory. A read-only memory device (see ROM) is broken into discrete blocks of data. These blocks are called pages. Each block has X number of bytes.

PCB
The abbreviation for a printed-circuit board.

PHOTOTRANSISTOR
A transistor that is activated by an external light source.

POTENTIOMETER
1. A resistor that has a continuously moving contact which is generally mounted on a moving shaft. Used chiefly as a voltage divider. Also called a *pot* (slang).

2. An instrument for measuring a voltage by balancing it against a known voltage.

RAM
Random-access memory. A device for the temporary storage of data.

RASTER-SCAN DISPLAY
A display system whereby images are displayed by continuously scanning the cathode-ray tube horizontally and vertically with an electron beam. The display system controls the intensity of the electron beam.

RETRACE
In a raster-scan display, retrace is the time during which the cathode-ray tube electron beam is resetting either from right to left or from bottom to top.

RESISTOR
A device designed to have a definite amount of resistance. Used in circuits to limit current flow or to provide a voltage drop.

ROM
Read-only memory. A device for the permanent storage of data.

SIGNATURE ANALYSIS
A process of isolating digital logic faults at the component level by means of special test equipment called signature analyzers. Basically, signature analyzers (e.g., the ATARI® CAT Box) convert lengthy bit streams into four-digit hexadecimal signatures. The signature read by the analyzer at each circuit node is then compared with the known good signature for that node. This process continues until a fault is located.

TROUBLESHOOT
The process of locating and repairing a fault.

VECTOR
A line segment drawn between specific X and Y coordinates on a cathode-ray tube.

WATCHDOG
A counter circuit designed to protect the microprocessor from self-destruction if a program malfunction occurs. If a malfunction does occur, the counter applies continuous pulses to the reset line of the microprocessor, which causes the microprocessor to keep resetting.

X-Y DISPLAY
A display system whereby images are displayed with vectors.

ZENER DIODE
A special diode used as a regulator. Its main characteristic is breaking down at a specified reverse bias (Zener) voltage.

YOUR COMMENTS, PLEASE!

Your comments will assist Atari in improving our publications. The comments are an important part of preparing for revisions of game manuals. Please write in the space below.

If you have any technical questions about certain ATARI games products, or are requesting additional publications, we will immediately forward your note to the appropriate person.

Page: Comments:

Fill in if you wish a reply:

Name _____

Firm _____ ☐ Distributor

Address _____ ☐ Operator

City _____ Country _____ ☐ Other _____

Phone: Country Code _____ Local Number _____

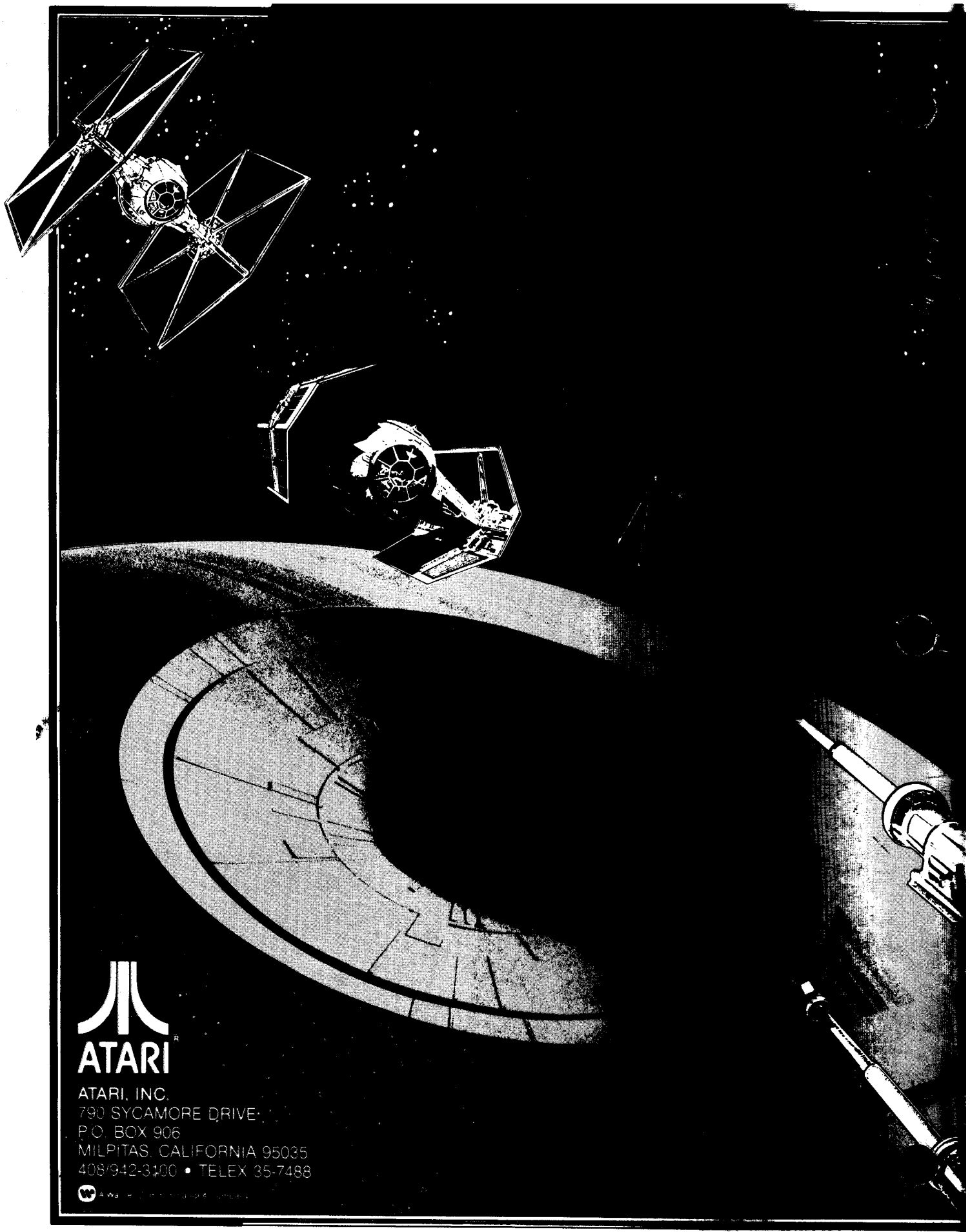
ATARI®
ATARI, INC.
790 SYCAMORE DRIVE
P.O. BOX 906
MILPITAS, CALIFORNIA 95035
408/942-3400 • TELEX 35-7488

Star Wars™ Troubleshooting Guide

*Trademarks of Lucasfilms, Ltd. used by Atari, Inc. under license.

8M

ATARI®

A Warner Communications Company

SP-225
1st printing

Table of Contents

Troubleshooting With the Diagnostics Program 1
Introduction 1
Trouble Analysis 1
Preliminary Procedure 1
Program and Analog Vector-Generator RAM/ROM Self-Test 1

Troubleshooting the Sound PCB 2
RAM and ROM Test 3
Music and Sound Effects Generators Test 3

Troubleshooting the Main and AVG PCB 4
Troubleshooting the Watchdog Circuit 4

Hardware Diagnostics Tests
Preliminary Procedure 5
Main PCB Microprocessor and Memory Test 5
Analog Vector-Generator Memory Test 5
Analog Vector-Generator Instructions Tests 6
Matrix Processor Instructions Tests 8
Divider Tests 13
Sound PCB Communications Test 14

Troubleshooting With the CAT Box 14

Troubleshooting the Main PCB 14
CAT Box Preliminary Set-Up 14
Troubleshooting the Address Lines 14
Troubleshooting the Data Lines 15
Troubleshooting the Program RAM 15
Troubleshooting with Checksums 15
Troubleshooting the Option Switch Inputs 16

Troubleshooting the Sound PCB 16
CAT Box Preliminary Set-Up 16
Troubleshooting the Address Lines 16
Troubleshooting the Data Lines 17
Troubleshooting the Program RAM 17
Troubleshooting with Checksums 17

Analog Vector-Generator Signature Analysis 18

List of Illustrations

Figure 1	HALT Waveform at HALT Test Point	6
Figure 2	VECTOR (Long) Waveform at VECTOR Test Point	6
Figure 3	VECTOR (Short) at VECTOR Test Point	7
Figure 4	CENTER Waveform at Pin 7 of Center Flag Flip-Flop (2F)	7
Figure 5	SCALELD Waveform at Pin 11 of Vector Scaling Gate (5J)	7
Figure 6	STATCLK Waveform at Pin 3 of Vector Scaling Gate (5J)	7

List of Tables

Table 1	Main and AVG PCB Faulty RAM and ROM Locations	2
Table 2	Faulty RAM and ROM Locations	3
Table 3	Faulty Music and Sound Effects Generator Locations	3
Table 4	Main PCB Address Lines	15
Table 5	Main PCB Data Lines	15
Table 6	Main PCB ROM Checksums	16
Table 7	Main PCB Option Switch Inputs	16
Table 8	Sound PCB Address Lines	17
Table 9	Sound PCB Data Lines	17
Table 10	Sound PCB Checksums	17

Troubleshooting With the Diagnostics Program

Introduction

The STAR WARS game circuitry is contained on three printed-circuit boards (PCB): the Analog Vector-Generator (AVG) PCB, the Main PCB, and the Sound PCB.

The AVG PCB contains the analog vector-generator which draws the lines on the screen. It has 12 kilobytes of vector RAM and 4 kilobytes of vector ROM.

The Main PCB contains the 68B09E game microprocessor; 48 kilobytes of program ROM; 2 kilobytes of program RAM; option switches; means for reading control panel switches and potentiometers; a pseudo-random number generator; a digital divider; and a matrix processor which performs the math for the three dimensional graphics.

The Sound PCB contains a 68B09E microprocessor; 16 kilobytes of ROM (for the program, sound tables, and speech vocabulary); a 6532A peripheral interface adapter (with 128 bytes of RAM, two bidirectional input/output (I/O) ports, and an interrupt timer); 2 kilobytes of RAM; a speech synthesizer; four custom music and sound effects generators; a stereo image synthesizer; and an interface to the Main PCB.

The Self-Test Mode (selected by the Self-Test switch on the utility panel) tests most of the hardware. Refer to Chapter 2 of the Operators Manual for the basic self-test procedures. This game also includes a Hardware Diagnostic Mode, which permits the repair technician to select specific hardware diagnostic tests to aid in troubleshooting (refer to Hardware Diagnostic Tests for additional information). This Troubleshooting Guide describes the recommended method for effectively using the Self-Test and Hardware Diagnostic Tests to quickly locate defective components.

Carefully read the following Trouble Analysis discussion before attempting to perform the troubleshooting procedures.

Trouble Analysis

A thorough analysis of the trouble symptoms with the aid of the following discussion, should help to quickly localize the trouble to a major circuit.

Preliminary Procedure

1. Perform the Self-Test Procedure as described in Chapter 2 of the Operators Manual. If the self-test is not helpful, or is inoperative, proceed with part 2.
2. Check the power supply voltages and the clocks.

NOTE

The Sound PCB can be tested without the Main and AVG PCB completely working.

3. Perform Hardware Diagnostic Test 1 to determine if enough of the Main PCB memory is functioning to perform additional tests.
4. Perform Hardware Diagnostic Test 2 to determine if the AVG PCB memory is faulty. The vector generator may not work if its memory is faulty.
5. If the AVG memory is functioning properly, but the remaining AVG circuitry is not, perform Hardware Diagnostic Tests 3 through 8. The AVG circuitry must be functioning properly before proceeding to part 6.
6. If parts 2 through 5 have been performed, enough of the system should be working so that the Self-Test Procedure can be accomplished as described in Chapter 2 of the Operators Manual. If there are problems in the divider or matrix processor, the Mathbox Tests display will indicate which tests failed and the number of the appropriate Hardware Diagnostic Test for troubleshooting the faulty circuit. If there are problems in the RAM or ROM on the Main or AVG PCB, the Hardware Errors display will indicate which RAM or ROM is faulty by the characteristics of the tones that accompany the Hardware Errors display. The following procedure describes the method for performing a self-test of the program and analog vector-generator RAM and ROM.

Program and Analog Vector-Generator RAM/ROM Self-Test

Check the condition of the RAM and ROM on the Main and AVG PCB as follows:

1. Obtain the Hardware Errors display as described in Chapter 2 of the Operators Manual.
2. Immediately after the Hardware Errors display appears, a series of 16 tones should be heard that indicates the condition of the program RAM and analog-vector generator. The series of tones, separated by a short pause, will repeat indefinitely. A high upward-sweeping tone indicates a properly operating RAM or ROM, while a low downward-sweeping tone indicates a faulty RAM or ROM. Count the tones to determine the location of the faulty RAM or ROM as shown in Table 1.

Table 1 Main and AVG PCB Faulty RAM and ROM Locations

Tone	Location	Description
1	2F/H (Main)	Program RAM
2	5F (Main)	Matrix Processor RAM 0
3	5H (Main)	Matrix Processor RAM 1
4	3L (AVG)	Vector RAM 0
5	3M (AVG)	Vector RAM 1
6	3P(AVG)	Vector RAM 2
7	4L (AVG)	Vector RAM 3
8	4M (AVG)	Vector RAM 4
9	4P (AVG)	Vector RAM 5
10	1E (Main)	Non-Volatile RAM (RAM portion only)
11	1F (Main)	Program ROM 0
12	1H/J (Main)	Program ROM 1
13	1J/K (Main)	Program ROM 2
14	1K/L (Main)	Program ROM 3
15	1M (Main)	Program ROM 4
16	1L (AVG)	Vector ROM

If the preceding RAM and ROM self-test did not locate the problem, refer to the following symptoms for additional trouble-analysis information:

- ***No sound, but video is present and the game seems to work.*** Check the Sound PCB, Regulator/Audio II PCB, or the speakers.

NOTE

The volume control on the utility panel is wired to the input of the power amplifiers (rather than the output) so that the amplifiers will run at *full volume* if the utility panel is disconnected.

- ***No video, but there is sound and the game seems to work.*** Check the AVG PCB or the display. If the display is suspect, substitute a known good display or use an X-Y oscilloscope connected to the AVG X and Y outputs to troubleshoot the display. If an X-Y oscilloscope is not available, use the normal sweep mode and check at the X, Y, R, G, and B test points. In either case, verify that the X, Y, R, G, and B outputs are present. If problems still exist, refer to Troubleshooting the AVG PCB.
- ***Some video, but no enemy ships or stars.*** Check the matrix processor and divider circuits by obtaining the Mathbox Tests display with the game in the Self-Test Mode as described in Chapter 2 of the Operators Manual. If the BAD MATH READY LINE message appears and the math ready line is stuck low, the result will be some video but no enemy ships or stars. If the BAD MATH READY LINE message appears and the math ready line is stuck high, the screen will be completely blank in game mode (but will function during Self-Test).
- ***Everything seems to work, but there are no stars in the space wave, and all the dots on the ground in the Tower wave come from the same point.*** Check the pseudo-random number generator at locations 4D, 5B, 5C, and 5D on the Main PCB. Make sure the 3-MHz clock is present and that $\overline{\text{PRNGCLR}}$ is not permanently low. $\overline{\text{PRNGCLR}}$ is made low by a hardware reset and made high by the microprocessor. If the program is not running, the pseudo random number generator will remain cleared. If the pseudo-random number generator is working, connect a 2.2-kilohm resistor from pin 13 of the integrated circuit at location 5D to pin 1 of connector J16 and listen for white noise.

CAUTION

Switch 8 on the option switch at location 10D on the Main PCB selects a freeze mode. By pressing the left fire trigger on the flight control, the display can be advanced frame-by-frame. Some frames use an extra-high brightness level to achieve special effects, e.g., the Death Star explosion. During normal game play, these effects last for a short time; thus, there is no danger to the CRT or the display circuitry. However, if these frames are displayed for too long in the freeze mode, the CRT screen could be burned and/or the display circuitry damaged.

Troubleshooting the Sound PCB

The following procedure is recommended if the game is completely inoperative and it has been determined that the problem is not a faulty display. The Sound PCB can be tested without the Main PCB or AVG PCB fully operative. The Main PCB must be connected, although the AVG PCB can be removed for this procedure.

1. Visually inspect the Sound PCB for obvious problems:
   - Loose, missing, or improperly oriented integrated circuits.
   - Solder shorts.
2. Check for the following voltages:
   - +5 VDC
   - +12 VDC
   - -5 VDC

3. Check for the following clocks:
   - CLK E (1.5 MHz)
   - CLK Q (1.5 MHz in quadrature with CLK E)
   - 6 MHz
4. Check that the RESET line to the microprocessor at location 2C on the Main PCB is normally high and goes low when the RESET test point on the Main PCB is momentarily grounded. If necessary, ground the $\overline{\text{WDDIS}}$ and $\overline{\text{HALT}}$ test points on the Main PCB.
5. Check that the IRQ line to the Sound PCB microprocessor at location 3K is not permanently low. It is acceptable if the IRQ line is intermittently low; but, a permanent low indicates a fault that could be caused by a trace short, a defective peripheral interface adapter at location 1E, or the program not running.

NOTE

If the above signals, voltages, and clocks are present, the following self-test procedures can be performed on the Sound PCB even if everything else on the Main PCB and AVG PCB is inoperative.

RAM and ROM Test

1. Set the Self-Test switch to the on (up) position (unless the $\overline{\text{WDDIS}}$ and the $\overline{\text{HALT}}$ test points on the Main PCB have been grounded).
2. Ground the SELF-TEST test point on the Sound PCB (ignore the sounds) and then momentarily ground the RESET test point on the Main PCB.
3. Verify that a series of four tones is heard after the RESET test point is grounded. The series of tones, separated by a short pause, will be repeated indefinitely. A high tone indicates a good RAM or ROM; a low tone indicates a faulty RAM or ROM. Count the tones and use Table 2 to locate a faulty RAM or ROM on the Sound PCB.
4. Unground the SELF-TEST test point on the Sound PCB.

Table 2 Faulty RAM and ROM Locations

Tone	Location	Description
1	1F/H	Sound RAM
2	1E	Peripheral Interface Adapter RAM
3	1J/K	Sound ROM 0
4	1H	Sound ROM 1

Music and Sound Effects Generators Test

1. Set the Self-Test switch to the on (up) position.
2. Obtain the Switch Test self-test display as described in Chapter 2 of the Operators Manual.
3. Ground the SELF-TEST test point on the Sound PCB until the first sound is heard, then remove the ground.
4. A series of four long tones (one for each channel or voice) should be heard with each succeeding tone rising in frequency which indicates that CI/O 0 at location 5D is good. After a very short pause, a set of four double tones should occur, which indicates that CI/O 1 at location 4D is good. See Table 3 for a graphic representation of the tones and the location of the music and sound effects generator from which they originate.
5. Again, ground the SELF-TEST test point until a set of four triplet tones is heard, which indicates that CI/O 2 at location 3D is good. The last set of four quadruplet tones indicates that CI/O 3 at location 2D is good. See Table 3 for a graphic representation of the tones and the location of the music and sound effects generator from which they originate.

Table 3 Faulty Music and Sound Effects Generator Locations

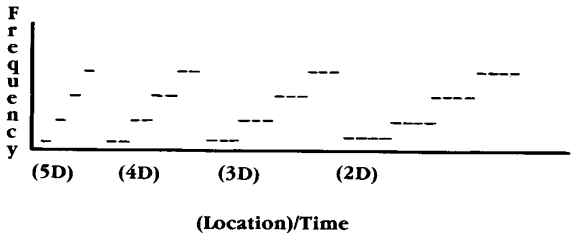

6. Ground the SELF-TEST test point on the Sound PCB. A sound should be heard after a short interval. With the SELF-TEST test point continuously grounded, a series of two-second sound segments comprising three sound groups (voice, music, and sound effects) should be heard. By ungrounding the SELF-TEST test point as soon as a sound segment starts, that particular sound should finish regardless of its duration. Ground the SELF-TEST test point again to continue with the next sound segment.
7. Repeat the preceding tests by momentarily grounding the RESET test point on the Main PCB and performing parts 2 through 6.

If there is no audible sound for any of the preceding tests, connect an oscilloscope to pin 8 of the speech synthesizer at location 1C/D on the Sound PCB and look for some obvious activity when the speech test is supposed to be running (about 10 seconds after the RESET test point on the Main PCB is grounded). Repeat this procedure at the outputs of the music and sound effects generators buffers located on the Sound PCB (4C-pin 1, 4C-pin 7, 3C-pin 1, and 3C-pin 7). Even when the music and sound effects generators are working, there will be no measurable signals at the outputs of the custom sound integrated circuits themselves because the buffers act as current-summing amplifiers.

If the oscilloscope indicates that audio is present but there is no audible sound, trace the signal downstream to the speakers. If problems still exist, refer to Troubleshooting With the CAT Box for the procedure on Troubleshooting the Sound PCB.

Troubleshooting the Main and AVG PCB

If the AVG PCB was removed while testing the Sound PCB, it should be reinstalled for the following tests (the Sound PCB can be removed for this test). If the $\overline{\text{HALT}}$ test point on the Main PCB was grounded for the Sound PCB test, remove the ground jumper.

If the Main and AVG PCB circuits are both faulty, first check the Main PCB as follows:

1. Visually inspect the board for obvious problems:
   - Loose, missing, or improperly oriented integrated circuits.
   - Solder shorts.
2. Check for the following voltages:
   - +5 V
   - +12 V
   - +5 V EAROM (there is a separate +5 V for the non-volatile RAM)
   - +10.3 V unregulated.
3. Check for the following clocks:
   - 12 MHz
   - 6 MHz
   - 3 MHz
   - 1.5 MHz
   - E
   - Q
4. Check that the microprocessor HALT, NMI, and FIRQ lines are always high.
5. Check that the microprocessor RESET line is high except when the RESET test point is grounded. If necessary, disable the watchdog circuit by grounding the $\overline{\text{WDDIS}}$ test point on the Main PCB. Refer to Troubleshooting the Watchdog Circuit if the watchdog circuit is not working.
6. Check that the microprocessor IRQ line is not permanently low. (An intermittent low on the IRQ line is acceptable.)
7. Perform Hardware Diagnostic Test 1 to check that the Main PCB RAM and ROM is working. If the RAM or ROM is faulty, refer to Troubleshooting With the CAT Box for checking the Main PCB.

If the Main PCB RAM or ROM is working and there is no display, check the AVG PCB as follows:

1. Visually inspect the AVG PCB for obvious problems:
   - Loose, missing, or improperly oriented integrated circuits.
   - Solder shorts.
2. Check for the following voltages:
   - +5 V
   - +12 VDC
   - +15 VDC
   - +22 VDC
   - -22 VDC
   - -15 V
3. Check for the following clocks:
   - 12 MHz
   - 6 MHz
   - 3 MHz
   - VGCLK (1.5 MHz)

If the voltages and clocks are present, perform Hardware Diagnostic Test 2 to determine if the vector generator RAM and ROM are working.

If the vector generator RAM and ROM are working, but the vector generator is faulty, perform Hardware Diagnostic Test 3 through 8. These tests will enable you to trace the micro-operation of each vector-generator instruction.

Another method of determining a vector generator hardware failure is to use signature analysis, which is selected by Hardware Diagnostic Test 9. (See Analog Vector-Generator Signature Analysis).

Troubleshooting the Watchdog Circuit

The watchdog circuit will send continuous reset pulses to the microprocessor on the Main PCB if a problem exists in the microprocessor circuit. If the Self-Test Mode is inop-

erative, check the RESET line. $\overline{\text{RESET}}$ is a microprocessor input (pin 37). Normally, reset should occur during power-up or when the RESET test point is grounded. A pulsing $\overline{\text{RESET}}$ line indicates that something is causing the microprocessor to lose its place in the program. Typical causes are:

- Open or shorted address or data bus lines.
- Faulty microprocessor.
- Faulty bus buffers.
- Faulty RAM or ROM.
- Any faulty input or output that causes an address or data line to be held in a constant high or low state.

NOTE

To aid in troubleshooting, connect the $\overline{\text{WDDIS}}$ test point to ground to prevent resets.

Hardware Diagnostic Tests

The Hardware Diagnostic Tests use the option switches at location 10D on the Main PCB. (Remember to restore the option switches to their proper setting when the diagnostic testing is completed.)

Preliminary Procedure

1. Set the Self-Test switch to the on (up) position.
2. Ground the DIAGN test point on the Main PCB.
3. Set the option switches as indicated in the test procedure and momentarily ground the RESET test point on the Main PCB. If an unimplemented switch position is selected, LED 1, 2, and 3 on the Main PCB will all flash on and off about once per second. Also, the display will show the number of the test for Hardware Diagnostic Tests 10 through 26 (if the AVG PCB and display are working).
4. Consider the following suggestions:
   - If a significant number of tests are to be performed attach a small momentary on, normally off, pushbutton switch to the RESET test points.
   - Remove the high-score and bookkeeping non-volatile RAM (NOVRAM) from location 1E on the Main PCB while troubleshooting the rest of the hardware. Each time the RESET test point is grounded, one of the RAM store cycles is used up. The non-volatile RAM is rated for either 10,000 store cycles if the data is not changed, and 1,000 store cycles if the data is changed.

Main PCB Microprocessor and Memory Test

The following test determines whether the 68B09E microprocessor, ROM 4, and program RAM on the Main PCB are working together to enable the basic Self-Test and Hardware Diagnostic Tests to be performed.

Test 1

1. Perform the Preliminary Procedure under Hardware Diagnostic Tests.
2. Set the option switch at location 10D on the Main PCB as follows:

8	7	6	5	4	3	2	1
off	off	off	off	off	off	off	off

NOTE

If Test 2 was performed just prior to Test 1, omit part 3 and proceed to part 4.

3. Momentarily ground the RESET test point on the Main PCB. LED 1, 2, and 3 should all light and remain lit for about 10 seconds.
4. If the microprocessor is running, LED 2 and 3 will extinguish and LED 1 will flash on and off about once per second. LED 2 and 3 must be off; if not, the microprocessor may be running in a failure mode with the RAM and ROM not working.

   LED 1 will be set to flash (or not flash) depending on the results of the test, and will continue in that state until another test is selected or the RESET test point is grounded. For example, if something happens after the test that either corrects the faulty program RAM or causes a malfunction, the diagnostic program will not recognize it and LED 1 will continue to flash (or not flash) until the RESET test point is grounded to repeat the test again.
5. If the microprocessor is not running, disconnect the Sound PCB or the AVG PCB. If the microprocessor begins to work, the problem may be a short on one of the address or clock lines on the Sound or AVG PCB.
6. If the problem still exists, refer to Troubleshooting With the CAT Box for checking the Sound and AVG PCB.

Analog Vector-Generator Memory Test

This test determines the condition of the vector generator RAM and ROM on the AVG PCB.

Test 2

1. Perform the Preliminary Procedure under Hardware Diagnostic Tests.
2. Set the option switch at location 10D on the Main PCB as follows:

8	7	6	5	4	3	2	1
on	off	off	off	off	off	off	off

NOTE

If Test 1 was performed just prior to Test 2, omit part 3 and proceed to part 4. If Test 1 or 2 is selected after other tests have been selected, the RESET switch must be pressed again to perform the test.

3. Momentarily ground the RESET test point on the Main PCB. LED 1, 2, and 3 should all light and remain lit for about 10 seconds.
4. LED 1 and 3 will extinguish, and, if the vector generator RAM and ROM are working, LED 2 will flash on and off about once per second.

   LED 2 will be set to flash (or not flash) depending on the results of the test and will continue in that state until another test is selected or the RESET test point is grounded. For example, if something happens after the test that either corrects the faulty vector generator RAM or ROM or causes a malfunction, the diagnostic program will not recognize it and LED 2 will continue to flash (or not flash) until the RESET test point is grounded to repeat the test again. (The memory portion of Test 1 and 2 are accomplished simultaneously.)

Analog Vector-Generator Instructions Tests

The following Test 3 through 9 generate specific analog vector-generator instructions. Each test is retriggered every 400 microseconds for as long as the test is selected. The appropriate waveform obtained at each test point is included for each test.

Perform the Preliminary Procedure under Hardware Diagnostic Tests and set the option switch at location 10D on the Main PCB as indicated for each test.

NOTE

It is not necessary to ground the RESET test point on the Main PCB when selecting within the following Test 3 through 9. Also, if the Atari PAT 9000 Programmable Test Station is used, turn off the color X-Y monitor.

Test 3

Option Switch Setting:

8	7	6	5	4	3	2	1
on	on	off	off	off	off	off	off

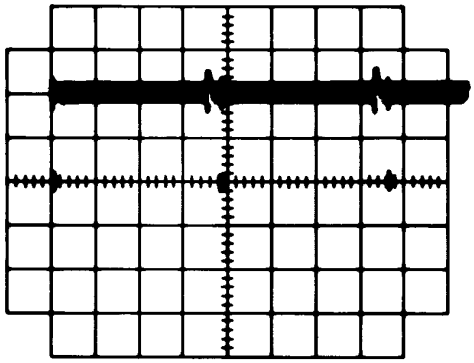

Deflection Factor: 2 V/division
Sweep Rate: 100 μsec/division

Figure 1 HALT Waveform at HALT Test Point

Test 4

Option Switch Setting:

8	7	6	5	4	3	2	1
on	on	off	off	off	off	off	on

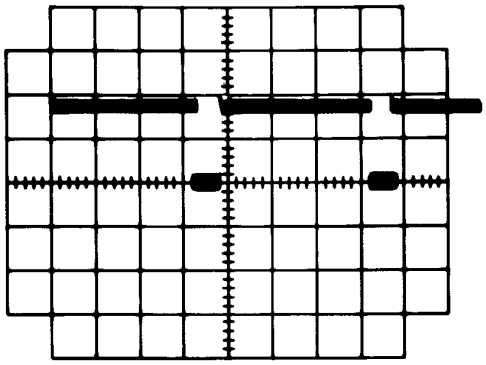

Deflection Factor: 2 V/division
Sweep Rate: 100 μsec/division

Figure 2 VECTOR (Long) Waveform at VECTOR Test Point

Test 5

Option Switch Setting:

8	7	6	5	4	3	2	1
on	on	off	off	off	off	on	off

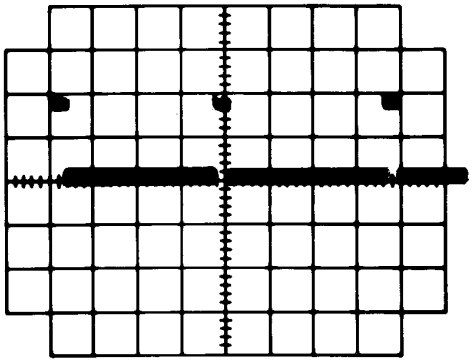

Deflection Factor: 2 V/division
Sweep Rate: 100 μsec/division

Figure 3 VECTOR (Short) at VECTOR Test Point

Test 6

Option Switch Setting:

8	7	6	5	4	3	2	1
on	on	off	off	off	off	on	on

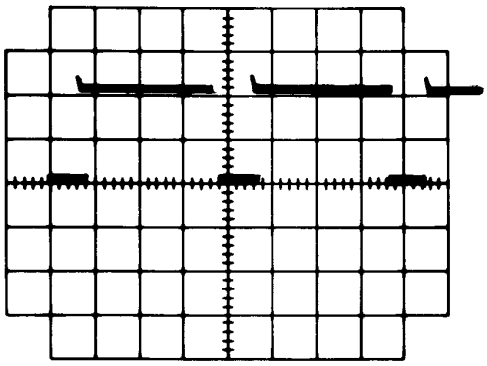

Deflection Factor: 2 V/division
Sweep Rate: 100 μsec/division

Figure 4 CENTER Waveform at Pin 7 of Center Flag Flip-Flop (2F)

Test 7

Option Switch Setting:

8	7	6	5	4	3	2	1
on	on	off	off	off	on	off	off

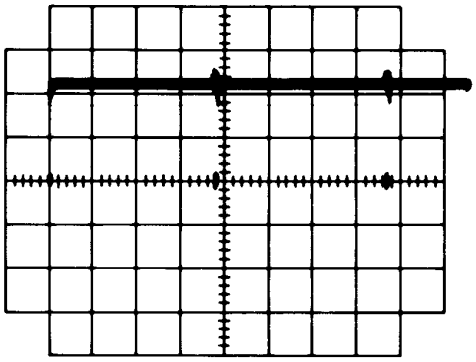

Deflection Factor: 2 V/division
Sweep Rate: 100 μsec/division

Figure 5 SCALELD Waveform at Pin 11 of Vector Scaling Gate (5J)

Test 8

Option Switch Setting:

8	7	6	5	4	3	2	1
on	on	off	off	off	on	off	on

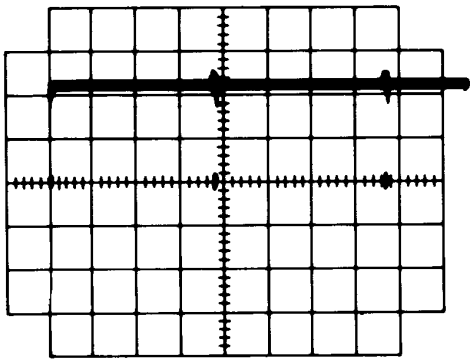

Deflection Factor: 2 V/division
Sweep Rate: 100 μsec/division

Figure 6 STATCLK Waveform at Pin 3 of Vector Scaling Gate (5J)

Test 9

Option Switch Setting:

8	7	6	5	4	3	2	1
on	on	off	off	off	on	on	off

For Analog Vector-Generator signature analysis see Analog Vector-Generator Signature Analysis procedure.

Matrix Processor Instructions Tests

The following Test 10 through 20 generates specific matrix processor instructions. The correct hexadecimal address for bits zero through nine on the matrix processor address bus are included for each test. The test number will be shown on the display (assuming that the display and AVG PCB are working). Each test is retriggered every 28 to 84 microseconds for as long as the test is selected.

Perform the Preliminary Procedure under Hardware Diagnostic Tests and set the option switches at location 10D on the Main PCB as indicated in the test.

NOTE

It is not necessary to ground the RESET test point on the Main PCB when selecting within the following Test 10 through 20.

Test 10

Option Switch Setting:

8	7	6	5	4	3	2	1
on	on	on	off	off	off	off	off

Microprogram	Instruction	Data	MPA0–MPA9
LDA M(OF), HALT	Load register A from memory location 0F, halt.	5555	15C

Test 10 performs the following operations:

1. The 68BO9E microprocessor on the Main PCB writes a 15C into the matrix processor address counter during $\overline{MWO}$ which forms the address for the instruction $\overline{PROM}$ and is the starting address of the microprogram to be executed. $\overline{MWO}$ also sets the flip-flop at location 8H in the matrix processor clock which causes the MATH RUN line to go high. A high on the MATH RUN line indicates that the matrix processor is busy, and will stay high until either a HALT command is encountered in the microcode or the microprocessor interrupts the matrix processor. The MATH RUN line is the line actually being checked in the Mathbox Tests self-test. The MATH RUN line allows the matrix processor clock to run and generates the strobes which synchronize the fetching of the micro-instructions. The matrix processor clock produces an instruction cycle time of 416 nanoseconds except when a multiply is being done; then it will wait the 2.7 microseconds required to perform the multiply. (This test does not use the multiplier.)
2. The first instruction at address 15C in the instruction PROM will cause register A to be loaded from data memory location 00F, and will also halt the matrix processor. The 16-bit word at instruction PROM location 15C is 848F which functions as follows:

IP15-1 Register A Load (Control)
IP14-0 Register B Load (Control)
IP13-0 Register C Load (Control) and Multiply/Accumulate
IP12-0 Clear Accumulator (Control)
IP11-0 Increment Block Index Counter (Control)
IP10-1 Halt Matrix Processor (Control)
IP9-0 Road Accumulator (Control)
IP8-0 Load Accumulator (Control)
IP7-1 Address Mode (Control) 1 = Direct
IP6-0 To Matrix Processor RAM Address Bit 6 through Matrix Processor Address Selector
IP5-0 To Matrix Processor RAM Address Bit 5 through Matrix Processor Address Selector
IP4-0 To Matrix Processor RAM Address Bit 4 through Matrix Processor Address Selector
IP3-1 To Matrix Processor RAM Address Bit 3 through Matrix Processor Address Selector
IP2-1 To Matrix Processor RAM Address Bit 2 through Matrix Processor Address Selector
IP1-1 To Matrix Processor RAM Address Bit 1 through Matrix Processor Address Selector
IP0-1 To Matrix Processor RAM Address Bit 0 through Matrix Processor Address Selector

When IP7 = 1, the matrix processor address selector connects IP0–IP6 to MA0–MA6 (the matrix processor RAM address). Address bits MA7–MA10 are set to zero. Thus, the instruction PROM can directly address the first 128 words in the RAM. All of the test programs in the Hardware Diagnostic Tests use this direct address mode.

When IP7 = 0, the matrix processor address selector connects IP0 to MA0 and IP1 to MA1. Address bits MA2–MA9 are connected to the block index counter (which is loaded by the microprocessor on the Main PCB). In this addressing mode (the indirect mode) the instruction PROM

selects one of the four words in the block selected by the block index counter.

The data at Matrix Processor RAM location 00F should be 5555. The data was put there by the microprocessor, which also has access to the matrix processor RAM.

The ones (1) next to IP15 and IP10 mean that the instructions to be executed (simultaneously) are LDA and MHALT. The data to be loaded in register A comes from the matrix processor RAM location 00F.

The zeros (0) next to IP8, IP9, IP11, IP13, and IP14 mean that they are not executed.

IP15 and IP10 are actually executed by strobing the outputs of the instruction PROM strobe gates with the WP lines. The complement of WP ($\overline{WP}$) is used to increment the matrix processor address counter to 15D. Since the matrix processor is halted after executing only one instruction, it doesn't matter that the matrix processor address counter has been incremented. But, if the HALT had not been encountered, the matrix processor would next have executed the instructions at 15D, then 15E, and so on, until a HALT occurred.

Test 11

Option Switch Setting:

8	7	6	5	4	3	2	1
on	on	on	off	off	off	off	on

Microprogram	Instruction	Data	MPA0–MPA9
LDB M(OF), HALT	Load register B from memory location 0F, halt.	AAAA	160

This test is similiar to Test 10 except that register B is loaded instead of register A.

Test 12

Option Switch Setting:

8	7	6	5	4	3	2	1
on	on	on	off	off	off	on	off

Microprogram	Instruction	Data	MPA0–MPA9
LDC M(0F) MAC, HALT	Load register C from memory location 0F,multiply and accumulate,halt.	5555	164

This test is similar to Test 10 except that register C is loaded instead of register A. Loading register C will also start the multiplier/accumulator clock which will produce 33 clock pulses at pin 6 and 8 of the gates at location 8C. During this time, the $\overline{MACFLAG}$ signal will stall the matrix processor clock so that no strobes will be produced on the WP line until the multiply is finished (about 2.7 microseconds). If the multiplier/accumulator clock was malfunctioning, the matrix processor clock could wait indefinitely and cause the BAD MATH READY LINE message to appear on the Mathbox Tests display in the Self-Test Mode.

The halt command will be generated at the same time as the load C command which causes the MATH RUN line to go low. However, the multiplier/accumulator will continue to operate.

Test 13

Option Switch Setting:

8	7	6	5	4	3	2	1
on	on	on	off	off	off	on	on

Microprogram	Instruction	Data	MPA0–MPA9
CLA, HALT	Clear accumulator, halt.		168

This test is similiar to Test 10 except that the accumulator is cleared instead of loading register A.

Test 14

Option Switch Setting:

8	7	6	5	4	3	2	1
on	on	on	off	off	on	off	off

Microprogram	Instruction	Data	MPA0–MPA9
IBC, HALT	Increment block index counter		16C

This test is similiar to Test 10 except that the block index counter is incremented instead of loading register A.

Test 15

Option Switch Setting:

8	7	6	5	4	3	2	1
on	on	on	off	off	on	off	on

Microprogram	Instruction	Data	MPA0–MPA9
LAC M(00)	Load accumulator from memory location 00.	5555	170
SAC M(01), HALT	Store accumulator into memory location 01,halt.	5555	171

Test 15 performs the following operations:

1. The 68BO9E microprocessor on the Main PCB writes a 170 into the matrix processor address counter during $\overline{MWO}$ which forms the address for the instruction PROM and is the starting address of the microprogram to be executed. $\overline{MWO}$ also sets the flip-flop at location 8H in the matrix processor clock which causes the MATH RUN line to go high. A high on the MATH RUN line indicates that the matrix processor is busy, and will stay high until either a HALT command is encountered in the microcode or the microprocessor interrupts the matrix processor. The MATH RUN line is the line actually being checked in the Mathbox Tests self-test. The MATH RUN line allows the matrix processor clock to run and generates the strobes which synchronize the fetching of the micro-instructions. The matrix processor clock produces an instruction cycle time of 416 nanoseconds except when a multiply is being done; then it will wait the 2.7 microseconds required to perform the multiply. (This test does not use the multiplier.)
2. The first instruction at address 170 in the instruction PROM will cause register A to be loaded from data memory location 00F, and will also halt the matrix processor. The 16-bit word at instruction PROM location 170 is 848F which functions as follows:

   IP15-0 Register A Load (Control)
   IP14-0 Register B Load (Control)
   IP13-0 Register C Load (Control) and Multiply/-Accumulate
   IP12-0 Clear Accumulator (Control)
   IP11-0 Increment Block Index Counter (Control)
   IP10-0 Halt Matrix Processor (Control)
   IP9-0 Road Accumulator (Control)
   IP8-1 Load Accumulator (Control)
   IP7-1 Address Mode (Control) 1 = Direct
   IP6-0 To Matrix Processor RAM Address Bit 6 through Matrix Processor Address Selector
   IP5-0 To Matrix Processor RAM Address Bit 5 through Matrix Processor Address Selector
   IP4-0 To Matrix Processor RAM Address Bit 4 through Matrix Processor Address Selector
   IP3-0 To Matrix Processor RAM Address Bit 3 through Matrix Processor Address Selector
   IP2-0 To Matrix Processor RAM Address Bit 2 through Matrix Processor Address Selector
   IP1-0 To Matrix Processor RAM Address Bit 1 through Matrix Processor Address Selector
   IP0-0 To Matrix Processor RAM Address Bit 0 through Matrix Processor Address Selector

When IP7 = 1, the matrix processor address selector connects IP0–IP6 to MA0–MA6 (the matrix processor RAM address). Address bits MA7–MA10 are set to zero. Thus, the instruction PROM can directly address the first 128 words in the RAM. All of the test programs in the Hardware Diagnostic Tests use this direct address mode.

When IP7 = 0, the matrix processor address selector connects IP0 to MA0 and IP1 to MA1. Address bits MA2–MA9 are connected to the block index counter (which is loaded by the microprocessor on the Main PCB). In this addressing mode (the indirect mode) the instruction PROM selects one of the four words in the block selected by the block index counter.

The data at matrix processor RAM location 00F should be 5555. The data was put there by the microprocessor which also has access to the matrix processor RAM.

The one (1) next to Load Accumulator means the accumulator will be loaded with data. The data to be loaded into the accumulator will come from the matrix processor RAM location 000.

The zeros (0) next to the other commands mean that they will not be executed.

IP8 (load accumulator) is actually executed by strobing the outputs of the instruction PROM strobe gates with the WP line. The complement of WP ($\overline{WP}$) is used to increment the matrix processor address counter to 171.

3. The matrix address counter is now at address 171. The microcode at that location causes the data in the accumulator (previously loaded with 5555) to be written into matrix processor RAM location 001. This instruction is strobed by a special (longer) pulse than the WP. At the same time a HALT command is generated, strobed by WP. $\overline{WP}$ increments the matrix processor address counter to 172, which is ignored because the microprogram has finished executing.

Test 16

Option Switch Setting:

8	7	6	5	4	3	2	1
on	on	on	off	off	on	on	off

Microprogram	Instruction	Data	MPA0–MPA9
LAC M(00)	Load accumulator from memory location 00.	AAAA	170
SAC M(01),HALT	Store accumulation into memory location 01, halt.	AAAA	171

This test is similiar to Test 15 except the data is AAAA.

Test 17

Option Switch Setting:

8	7	6	5	4	3	2	1
on	on	on	off	off	on	on	on

Microprogram	Instruction	Data	MPA0–MPA9
LDA M(0C),CLA	Load register A from memory location 0C, clear accumulator.	5555	174
LDB M(0D)	Load register B from memory location 0D.	0000	175
LDC M(0E), MAC	Load register C from memory location 0E, multiply and accumulate.	4000	176
SAC M(00), HALT	Store accumulator into memory location 00.	5555	177

Performs (5555–0000) x 4000 = 5555

Test 17 performs the following operations:

1. The 68BO9E microprocessor on the Main PCB writes a 174 into the matrix processor address counter during $\overline{\text{MWO}}$ which forms the address for the instruction PROM and is the starting address of the microprogram to be executed. $\overline{\text{MWO}}$ also sets the flip-flop at location 8H in the matrix processor clock, which causes the MATH RUN line to go high. A high on the MATH RUN line indicates that the matrix processor is busy, and will stay high until either a HALT command is encountered in the microcode or the microprocessor interrupts the matrix processor. The MATH RUN line is the line actually being checked in the Mathbox Tests self-test. The MATH RUN line allows the matrix processor clock to run and generates the strobes which synchronize the fetching of the micro-instructions. The matrix processor clock produces an instruction cycle time of 416 nanoseconds except when a multiply is being done; then it will wait the 2.7 microseconds required to perform the multiply.
2. The first instruction at address 174 in the instruction PROM will load register A from data memory location 0C and clear the accumulator at the same time. These instructions are actually executed by strobing the outputs of the instruction PROM strobe gates with the WP line. The complement of the WP line ($\overline{\text{WP}}$) is used to increment the matrix processor address counter to 175.
3. The matrix processor address counter is now at address 175. The microcode at that location will cause register B to be loaded from data memory location 0D at the next WP strobe. The matrix processor address counter is incremented to 176.
4. The matrix processor address counter is now at address 176. The microcode at that location causes register C (serial multiplier) to be loaded from data memory location 0E at the next WP strobe. The matrix processor address counter is incremented to 177.

   Loading register C will also start the multiplier/accumulator clock which will produce 33 clock pulses at pin 6 and 8 of the gates at location 8C. During this time, the $\overline{\text{MACFLAG}}$ signal will stall the matrix processor clock so that no strobes will be produced on the WP line until the multiply is finished (about 2.7 microseconds). If the multiplier/accumulator clock was malfunctioning, the matrix processor clock could wait indefinitely and cause the BAD MATH READY LINE message to appear on the Mathbox Tests display in the Self-Test Mode.
5. The matrix processor address counter is now at address 177. The microcode at that location will cause the data from the accumulator to be stored into data memory address 00 (using a special strobe) and will generate a HALT instruction at the end of $\overline{\text{WP}}$. Thus, the matrix processor clock will stop and the MATH RUN line will go low to indicate that the microprogram has finished executing. The matrix processor address counter will then be incremented to 178, which is ignored.

Test 18

Option Switch Setting:

8	7	6	5	4	3	2	1
on	on	on	off	on	off	off	off

Microprogram	Instruction	Data	MPA0–MPA9
LDA M(0C),CLA	Load register A from memory location 0C, clear accumulator.	0000	174
LDB M(0D)	Load register B from memory location 0D.	5555	175
LDC M(0E), MAC	Load register C from memory location 0E, multiply and accumulate.	C000	176
SAC M(00), HALT	Store accumulator into memory location 00.	5555	177

Performs (0000–5555) x 0000 = 5555

This test is similiar to Test 17 except that the data is different.

Test 19

Option Switch Setting:

8	7	6	5	4	3	2	1
on	on	on	off	on	off	off	on

Microprogram	Instruction	Data	MPA0–MPA9
LDA M(0C),CLA	Load register A from memory location 0C, clear accumulator.	2AAA	174
LDB M(0D)	Load register B from memory location 0D.	0000	175
LDC M(0E), MAC	Load register C from memory location 0E, multiply and accumulate.	4000	176
SAC M(00), HALT	Store accumulator into memory location 00, halt.	2AAA	177

Performs (2AAA–0000) x 4000 = 2AAA

This test is similiar to Test 17 except that the data is different.

Test 20

Option Switch Setting:

8	7	6	5	4	3	2	1
on	on	on	off	on	off	on	off

Microprogram	Instruction	Data	MPA0–MPA9
LDA M(0C),CLA	Load register A from memory location 0C, clear accumulator.	0000	174
LDB M(0D)	Load register B from memory location 0D.	2AAA	175
LDC M(0E), MAC	Load register C from memory location 0E, multiply and accumulate.	C000	176
SAC M(00), HALT	Store accumulator into memory location 00, halt.	2AAA	177

Performs (0000–2AAA) x C000 = 2AAA

This test is similar to Test 17 except that the data is different.

The Mathbox Tests self-test as described in Chapter 2 in the Operators Manual, performs Hardware Diagnostic Test 15 through 20. The Mathbox Tests display will show the option switch setting of any test that fails to produce the correct results.

The first Mathbox Tests self-test performed is similar to Hardware Diagnostic Test 17 without the data shown in the previous table. This test determines whether the math ready line is functioning properly. If not, the message BAD MATH READY LINE will appear on the Mathbox Tests display and the test will remain in a loop. (The other tests will not be run.)

If the math ready line is faulty and stuck low, the result will be some video without enemy ships or stars. If the math ready line is faulty and stuck high, the screen will be completely blank in game mode, but will function during Self-Test.

The Mathbox Tests self-test will also run the following additional tests which cannot be run from the Diagnostic Mode, but can give useful information about a malfunctioning PCB. If one of these tests fails, the letter of the test will be displayed along with the data that failed.

A. Accumulator Test

If the Accumulator Test fails, but Hardware Diagnostic Test 15 through 20 are satisfactory, the problem is likely to be with the shift registers at locations 9A and 9B, or the quad serial adder/subtractor at location 8B (all on the Main PCB).

1. Clears the accumulator.

2. Performs ACC= 0000 + (0001-0000) × 4000 (the result is 0001).
3. Stores ACC into memory.
4. Loads ACC back into register A and performs ACC= 0001 + (0001-0000) × 4000 (the result is 0002).
5. Repeats parts 3 and 4 which results in the number in the accumulator doubling each time. The sequence is 0001, 0002, 0004, 0008, 0010, 0020, 0040, 0080, 0100, 0200, 0400, 0800, 1000, 2000, 4000, 8000. (This is referred to as a "walking ones" test.)

B. Block Index Counter and Matrix Processor Indirect Addressing

The 68B09E microprocessor writes data directly into the RAM and, using the block index counter, runs a matrix processor program which uses the block index counter (in the indirect addressing mode).

C. Accumulator Adder Test

This test checks for a particular bit stream through the accumulator at location 8B on the Main PCB as follows:

1. Clears the accumulator.
2. Performs ACC = (1B2C-0000) × 4000 + (196A-0000) × 4000 (the result is 3496).

D. Subtractor Test

This test checks for a particular bit stream through the serial subtractor at location 8B on the Main PCB as follows:

1. Clears the accumulator.
2. Performs ACC = (2696-1B2C) × 4000 (the result is 0B6A).

Divider Tests

The divider circuit on the Main PCB is an unsigned 15-bit fractional divider which assumes that the dividend (numerator) is less than twice the divisor (denominator). The hardware consists of a dividend latch, a dividend shift register, a divisor inverting latch, an adder, a difference latch, a quotient shift register with tri-state buffer, and a divider control which includes a divide cycle counter. Refer to the detailed block diagram on Sheet 5B to aid in understanding the circuit operation.

The dividend latch is written into by the microprocessor and has two parts: the dividend latch high byte (DVDDH) and the dividend latch low byte (DVDDL). The dividend latch is not altered by the operation of the divider so it may be left at its previous value, if desired.

The divisor latch is also written into by the microprocessor and has two parts: the divisor high byte (DVSRH) and the divisor low byte (DVSRL). The DVSRH line loads the divisor high byte, clears the quotient shift register, and loads the dividend shift register from the dividend latch. The DVSRL line loads the divisor low byte and starts the divider.

The divider subtracts the divisor from the dividend in the dividend shift register and puts the result in the difference latch. If the result of this subtraction is positive, the carry (C16*) will be a "1." The "1" is shifted into the quotient shift register, and the value from the difference latch is stored into the dividend shift register. (In a conventional divider algorithm, the dividend shift register would then be shifted to the left, but here the output of the adder is wired to the difference latch which is already shifted to the left.) If the result of the subtraction is negative, the carry (C16*) will be a "0." The "0" is shifted into the quotient shift register and the dividend shift register shifts once to the left. The value in the difference latch is otherwise ignored.

The following Test 21 through 25 determines the condition of the divider circuit. The test number will be shown on the display (assuming that the display and the AVG PCB are working). Each test is retriggered every 50 to 60 microseconds for as long as the test is selected.

Perform the Preliminary Procedure under Hardware Diagnostic Tests and set the option switch at location 10D on the Main PCB as indicated in the test.

The Mathbox Tests self-test display performs Hardware Diagnostic Test 21 through 25. The Mathbox Tests display shows the Option switch setting of any test that fails to produce the correct results.

Test 21

Tests for 15 pulses at pin 10 of divide cycle counter at location 8P.

Option Switch Setting:

8	7	6	5	4	3	2	1
on	on	on	on	off	off	off	off

4000 (Dividend)/4000 (Divisor) = 4000 (Quotient)

Test 22

Tests for shorted bits in the dividend and/or quotient.

Option Switch Setting:

8	7	6	5	4	3	2	1
on	on	on	on	off	off	off	on

5555 (Dividend)/4000 (Divisor) = 5555 (Quotient)

Test 23

Tests for shorted bits in the dividend and/or quotient.

Option Switch Setting:

8	7	6	5	4	3	2	1
on	on	on	on	off	off	on	off

2AAA (Dividend)/4000 (Divisor) = 2AAA (Quotient)

Test 24

Tests for shorter bits in the divisor. The data is inverted and appears at the outputs of the divisor inverting latch at location 4P, 5P, 6P, and 6L.

Option Switch Setting:

8	7	6	5	4	3	2	1
on	on	on	on	off	off	on	on

2AAA (Dividend)/2AAA (Divisor) = 4000 (Quotient)

Test 25

Tests for shorted bits in the divisor. The data is inverted and appears at the outputs of the divisor inverting latch at location 4P, 5P, 6P, and 6L.

Option Switch Setting:

8	7	6	5	4	3	2	1
on	on	on	on	off	on	off	off

5555 (Dividend)/5555 (Divisor) = 4000 (Quotient)

Sound PCB Communications Test

The following Test 26 determines whether the Main PCB can communicate with the Sound PCB. The Main PCB sends a sequence of bytes (5A, 01, 02, 04, 08, 10, 20, 40, and 80) to the Sound PCB that the Sound PCB should echo back. The sequence is repeated as long as the test is selected. If successful, LED 3 will turn on and off about once per second. LED 1 and LED 2 must remain off.

This test does not determine that the Sound PCB is completely functional; only that enough of it is working to communicate with the Main PCB.

Perform the Preliminary Procedure under Hardware Diagnostic Tests and set the option switch at location 10D on the Main PCB as follows:

Test 26

Option Switch Setting:

8	7	6	5	4	3	2	1
on	on	on	on	on	off	off	off

Troubleshooting With the CAT Box

Troubleshooting the Main PCB

CAT Box Preliminary Set-Up

1. Turn off the electrical power to the game.
2. Remove the wiring harness from the Electromagnetic Interference (EMI) Shield PCB.
3. Disengage the fasteners holding the EMI Shield PCB to the EMI cage by pulling the pins out a short distance.
4. Remove the game PCB assemblies from the cage.
5. Connect the harness from the game to the EMI Shield PCB edge connectors.
6. Connect the $\overline{\text{WDDIS}}$ test point to ground.
7. There are two ways that the CAT Box can be connected to the Main PCB:
   a. Plug the CAT Box Interface cable into the 6809E CAT Box Adapter. Remove the microprocessor from its socket at location 1C on the Main PCB. Plug the 6809E CAT Box Adapter into the empty microprocessor socket at location 1C.
   b. If you do not have the 6809E CAT Box Adapter, plug the CAT Box interface cable directly into the Main PCB edge connector. This puts the 68B09E microprocessor on the Main PCB in the HALT mode, which puts the address, data, and R/W lines into the high-impedance state and makes it unnecessary to remove the microprocessor from the socket, unless desired.
8. Apply power to the game and to the CAT Box.
9. Set the CAT Box switches as follows:
   a. TESTER SELF-TEST: *OFF*
   b. TESTER MODE: *R/$\overline{\text{W}}$*
10. Press TESTER RESET.

Troubleshooting the Address Lines

1. Perform the CAT Box Preliminary Set-Up procedure under Troubleshooting the Main PCB.
2. Connect the Data Probe to the CAT Box.
3. Connect the Data Probe ground clip to a ground test point on the Main PCB.
4. Set the CAT Box switches as follows:
   a. BYTES: *1*
   b. PULSE MODE: *UNLATCHED*
   c. R/$\overline{\text{W}}$ MODE: *(OFF)*
   d. R/$\overline{\text{W}}$: *WRITE*

5. Key in the address pattern given in Table 4 with the CAT Box keyboard (use AAAA to start).
6. Press DATA SET.
7. Key in AA with the keyboard.
8. Set R/$\overline{W}$ MODE to STATIC.
9. Probe the IC-pins listed in Table 4 with the DATA PROBE and check that the corresponding 1 or 0 LED on the CAT Box lights up.
10. Repeat parts 4c through 9 using address 5555 in part 5 and data 55 in part 7.

Table 4 Main PCB Address Lines

Address Line	Logic State for Address AAAA	IC-Pin	Logic State for Address 5555
A15	1	0B/C-3	0
A14	0	0B/C-2	1
AB13	1	0B/C-1	0
AB12	0	1B-18	1
AB11	1	1B-16	0
AB10	0	1B-7	1
AB9	1	1B-5	0
AB8	0	1B-3	1
AB7	1	1C-9	0
AB6	0	1C-7	1
AB5	1	1C-5	0
AB4	0	1C-12	1
AB3	1	1C-18	0
AB2	0	1C-16	1
AB1	1	1C-14	0
AB0	0	1C-3	1

Troubleshooting the Data Lines

1. Perform the CAT Box Preliminary Set-Up procedure under Troubleshooting the Main PCB.
2. Connect the Data Probe to the CAT Box.
3. Connect the Data Probe ground clip to a ground test point on the Main PCB.

4.Set the CAT Box switches as follows:

   a. BYTES: *1*
   b. R/$\overline{W}$ MODE: *(OFF)*
   c. R/$\overline{W}$: *WRITE*

5. Key in address 0000 with the keyboard.
6. Press DATA SET.
7. Key in data AA with the keyboard.
8. Set R/$\overline{W}$ MODE to PULSE and then to STATIC.
9. Probe the IC-pin listed in Table 5 with the DATA PROBE and check that the 1 or 0 LED on the CAT Box lights up.

Table 5 Main PCB Data Lines

Data Line	Logic State for Data AA	IC-Pin	Logic State for Data 55
D7	1	4E-18	0
D6	0	4E-17	1
D5	1	4E-16	0
D4	0	4E-15	1
D3	1	4E-14	0
D2	0	4E-13	1
D1	1	4E-12	0
D0	0	4E-11	1

Troubleshooting the Program RAM

1. Perform the CAT Box Preliminary Set-Up procedure under Troubleshooting the Main PCB.
2. Set the CAT Box switches as follows:

   a. DBUS SOURCE: *ADDR*
   b. BYTES: *1024*
   c. R/$\overline{W}$ MODE: *(OFF)*
   d. R/$\overline{W}$: *WRITE*

3. Enter address 4800 with the keyboard.
4. Set R/$\overline{W}$ MODE to PULSE and back to (OFF).
5. Set R/$\overline{W}$ to READ.
6. Set R/$\overline{W}$ MODE to PULSE and back to (OFF).
7. The Program RAM is a 2K x 8 device. To test the entire device perform parts 2 through 6 with the address in part 3 at 4C00.
8. If the CAT Box reads an address that does not match that entered with the CAT Box keyboard, the COMPARE ERROR LED will light up.

Troubleshooting with Checksums

NOTE

This procedure can only be done with those CAT Boxes equipped with a Checksum switch.

1. Perform the CAT Box Preliminary Set-Up procedure under Troubleshooting the Main PCB.
2. Set the CAT Box switches as follows:

   a. BYTES: *1024*
   b. DBUS SOURCE: *DATA*
   c. *R/*$\overline{W}$ MODE: *(OFF)*
   d. CHECKSUM SWITCH: *ON*

3. Key in the address pattern given in Table 6.
4. Set the R/$\overline{W}$ MODE switch to PULSE and then back to (OFF).
5. Check the CAT Box ADDRESS/SIGNATURE display for the appropriate checksum.

6. Repeat parts 3 through 5 for each address listed in Table 6.

Table 6 Main PCB ROM Checksums

ROM Tested	Location	Address	Checksum
ROM 0	1F	6000	bEE4[1]
		6000	A736[2]
ROM 1	1H/J	8000	571E
ROM 2	1J/K	A000	73dd
ROM 3	1K/L	C000	F839
ROM 4	1M	E000	0210[3]

[1]*MPAGE must be low. If not, ground the RESET test point on the Main PCB.*

[2]*MPAGE must be high. If not, use the CAT Box to write 80 (data) to 4684 (address).*

[3]*All of the Self-Test and Hardware Diagnostics Tests are in this ROM.*

Troubleshooting the Option Switch Inputs

1. Perform the CAT Box Preliminary Set-Up procedure under Troubleshooting the Main PCB.
2. Set the CAT Box switches as follows:
   a. BYTES: *1*
   b. R/$\overline{W}$: *READ*
3. Set the CAT Box as follows for each address listed in Table 7:
   a. Set R/$\overline{W}$ MODE to (OFF).
   b. Enter the address with the keyboard.
   c. Set R/$\overline{W}$ MODE to STATIC.
   d. Activate the input switch indicated in Table 4 for the address.

Table 7 Main PCB Option Switch Inputs

Address	Input Switches	Test Results
4300	Left Fire/Start Right Fire Start Self-Test Coin-Aux Coin L Coin R	DATA display changes when any of these switches is activated.
4320	Left Thumb Right Thumb Diagn.	DATA display changes when any of these switches is activated.
4340	Option Switch at location 10D	DATA display changes when any of these switches is activated.
4360	Option Switch at location 10E/F	DATA display changes when any of these switches is activated.

If the preceding procedures for troubleshooting the Main PCB are successful, then there should be enough of the game microprocessor system working to perform the Self-Test and Hardware Diagnostic Tests procedures.

Troubleshooting the Sound PCB

CAT Box Preliminary Set-Up

1. Turn off the electrical power to the game.
2. Remove the wiring harness from the EMI Shield PCB.
3. Disengage the fasteners holding the EMI Shield PCB to the EMI cage by pulling the pins out a short distance.
4. Remove the game PCB assemblies from the cage.
5. Connect the harness from the game to the EMI Shield PCB edge connectors.
6. Connect the $\overline{\text{WDDIS}}$ test point to ground.
7. Plug the CAT Box Interface cable into the 6809E CAT Box Adapter.
8. Remove the microprocessor from its socket at location 3K on the Main PCB and plug the 6809E CAT Box Adapter into the empty socket at location 3K.
9. Apply power to the game and to the CAT Box.
10. Set the CAT Box switches as follows:
    a. TESTER SELF-TEST: *OFF*
    b. TESTER MODE: *R/$\overline{W}$*
11. Press TESTER RESET.

Troubleshooting the Address Lines

1. Perform the CAT Box Preliminary Set-Up procedure under Troubleshooting the Sound PCB.
2. Connect the Data Probe to the CAT Box.
3. Connect the Data Probe ground clip to a ground test point on the Sound PCB.
4. Set the CAT Box switches as follows:
   a. BYTES: *1*
   b. PULSE MODE: *UNLATCHED*
   c. R/$\overline{W}$ MODE: *(OFF)*
   d. R/$\overline{W}$: *WRITE*
5. Key in the address pattern given in Table 8 with the CAT Box keyboard (use AAAA to start).
6. Press DATA SET.
7. Key in AA with the keyboard.
8. Set R/$\overline{W}$ MODE to STATIC.
9. Probe the IC-pin listed in Table 8 with the Data Probe and check that the corresponding 1 or 0 LED on the CAT Box lights up.
10. Repeat parts 4c through 9 using address 5555 in part 5 and data 55 in part 7.

Table 8 Sound PCB Address Lines

Address Line	Logic State for Address AAAA	IC-Pin	Logic State for Address 5555
SA15	1	3K-23	0
SA14	0	2J-13	1
SA13	1	2J-14	0
SA12	0	1H-2	1
SA11	1	1H-23	0
SA10	0	1H-21	1
SA9	1	1H-24	0
SA8	0	1H-25	1
SA7	1	1H-3	0
SA6	0	1H-4	1
SA5	1	1H-5	0
SA4	0	1H-6	1
SA3	1	1H-7	0
SA2	0	1H-8	1
SA1	1	1H-9	0
SA0	0	1H-10	1

Troubleshooting the Data Lines

1. Perform the CAT Box Preliminary Set-Up procedure under Troubleshooting the Sound PCB.
2. Connect the Data Probe to the CAT Box.
3. Connect the Data Probe ground clip to a ground test point on the Sound PCB.
4. Set the CAT Box switches as follows:
   a. BYTES: *1*
   b. R/$\overline{W}$ MODE: *(OFF)*
   c. R/$\overline{W}$: *WRITE*
5. Key in address 0000 with the keyboard.
6. Press DATA SET.
7. Key in data AA with the keyboard.
8. Set R/$\overline{W}$ MODE to PULSE and then to STATIC.
9. Probe the IC-pin listed in Table 9 with the Data Probe and check that the corresponding 1 or 0 LED on the CAT Box lights up.

Table 9 Sound PCB Data Lines

Data Line	Logic State for Data AA	IC-Pin	Logic State for Data 55
SD7	1	1H-19	0
SD6	0	1H-18	1
SD5	1	1H-17	0
SD4	0	1H-16	1
SD3	1	1H-15	0
SD2	0	1H-13	1
SD1	1	1H-12	0
SD0	0	1H-11	1

Troubleshooting the Program RAM

1. Perform the CAT Box Preliminary Set-Up procedure under Troubleshooting the Sound PCB.
2. Set the CAT Box switches as follows:
   a. DBUS SOURCE: *ADDR*
   b. BYTES: *1024*
   c. R/$\overline{W}$ MODE: *(OFF)*
   d. R/$\overline{W}$: *WRITE*
3. Enter address 2000 with the keyboard.
4. Set R/$\overline{W}$ MODE to PULSE and back to (OFF).
5. Set R/$\overline{W}$ to READ.
6. Set R/$\overline{W}$ MODE to PULSE and back to (OFF).
7. The program RAM is a 2K x 8 device. To test the entire device, perform parts 2 through 6 with the address in part 3 at 2400. There is also 128 bytes of RAM in the 6532, starting at 1000.
8. If the CAT Box reads an address that doesn't match that entered with the CAT Box keyboard, the COMPARE ERROR LED will light.

Troubleshooting with Checksums

NOTE

This procedure can only be done with those CAT Boxes equipped with a Checksum switch.

1. Perform the CAT Box Preliminary Set-Up procedure under Troubleshooting the Sound PCB.
2. Set the CAT Box switches as follows:
   a. BYTES: *1024*
   b. DBUS SOURCE: *DATA*
   c. R/$\overline{W}$ MODE: *(OFF)*
   d. CHECKSUM SWITCH: *ON*
3. Key in the address pattern given in Table 10.
4. Set the R/$\overline{W}$ MODE switch to PULSE and then back to (OFF).
5. Check the CAT Box ADDRESS/SIGNATURE display for the appropriate checksum.
6. Repeat parts 3 through 5 for each address listed in Table 10.

Table 10 Sound PCB Checksums

ROM Tested	Location	Address	Checksum
ROM 0	1J/K	4000	6509
ROM 1	1H	6000	9358

Analog Vector-Generator Signature Analysis

The following procedure initializes the vector RAM and prevents resets. During signature analysis the normal execution of vector instructions is changed so that the vector address controller increments the vector address after every cycle. Vector HALT instructions are also ignored.

The state machine feedback is disconnected and instead the state machine PROM is driven by the vector address bus. This causes the state machine PROM to cycle sequentially through its addresses rather than be dependent upon the particular vector instruction being executed. In this way, the data from the vector memory does not affect the signatures generated by the state machine so that malfunctioning circuits can be easily located.

1. Set the Self-Test switch to the on position.
2. Ground the DIAGN test point on the Main PCB.
3. Set the option switch at location 10D on the Main PCB as follows:

8	7	6	5	4	3	2	1
on	on	off	off	off	on	on	off

4. Perform the CAT Box Preliminary Set-Up procedure under Troubleshooting the Sound PCB.
5. Connect the CAT Box Signature Analysis ground to the AVG PCB ground.
6. Connect the CAT Box Signature Analysis START and STOP to $\overline{\text{VRAM1}}$ at pin 2 of the vector address decoder at location 2K on the AVG PCB.
7. Connect the CAT Box Signature Analysis CLOCK to the SACLK test point on the AVG PCB.
8. Set the Signature Analyzer as follows:
   a. START: *negative*
   b. STOP: *positive*
   c. CLOCK: *negative*
9. Ground the test point marked SA on the AVG PCB.
10. Momentarily ground the RESET test point on the Main PCB.
11. Compare signatures to those shown on the AVG PCB schematics.

NOTE

If the vector RAM loses its data during signature analysis (due to the Data Probe shorting together two or more leads), momentarily ground the RESET test point on the Main PCB.

Remember, the FORCE will be with you—ALWAYS!

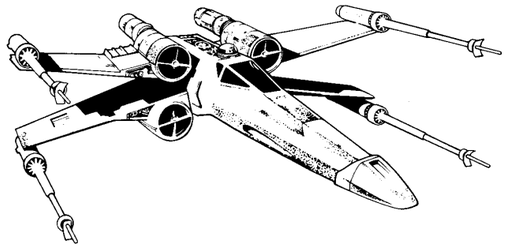

Table of Contents

Table of Contents . . . . . Sheet 1A

STAR WARS Upright Main Wiring Diagram (040465-01 B) . . . . . Sheet 1B

STAR WARS Cockpit Main Wiring Diagram (040474-01 B) . . . . . Sheet 2A

STAR WARS Regulator/Audio II PCB (035435-02 G) . . . . . Sheet 2B

STAR WARS Color X-Y Power Supply Wiring Diagram (037394-01 D) . . Sheet 3A

STAR WARS Game Interfaces: . . . . . Sheet 3B
- Coin Door Wiring Diagram (A037542-01 E)
- Utility Panel Wiring Diagram (A039254-01 C)
- Fluorescent Light Wiring Diagram (035833-01 A)

STAR WARS Memory Map—Parts 1 and 2 . . . . . Sheet 4A–4B

STAR WARS Functional Block Diagram and Guide to PCB Schematics . . Sheet 5A
STAR WARS Divider and Matrix Processor Detailed Block Diagram . . . . . Sheet 5B
STAR WARS Multiplier/Accumulator Detailed Block Diagram . . . . . Sheet 6A

Game PCB Schematics, Sheets 6B–17B

STAR WARS Main PCB . . . . . Sheet 6B–11A
STAR WARS Analog Vector-Generator PCB . . . . . Sheet 11B–14B
STAR WARS Sound PCB . . . . . Sheet 15A–16B
STAR WARS EMI Shield PCB . . . . . Sheet 17A
STAR WARS Interconnect PCB . . . . . Sheet 17B

NOTE

A STAR WARS Troubleshooting Guide is included as part of this Schematic Package Supplement. The STAR WARS Troubleshooting Guide contains Diagnostic Hardware tests and Atari CAT Box troubleshooting procedures.

NOTE

This staple temporarily holds the schematic package together. Remove the staple before using these schematics.

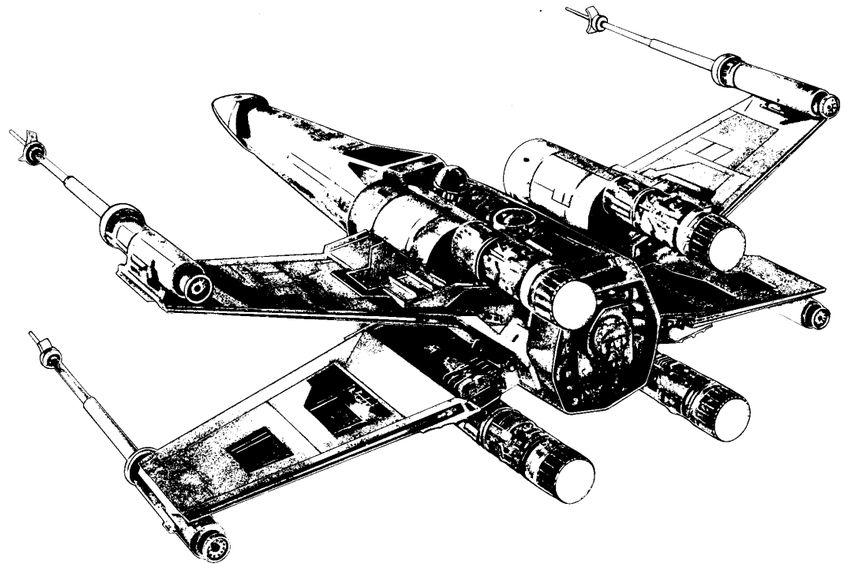

Schematic Package Supplement to

STAR WARS*

Operators Manual

Includes Troubleshooting Guide

* ©1983 Lucasfilm Ltd. & Atari, Inc. All rights reserved. Lucasfilm trademarks used under license.

8M

ATARI®

A Warner Communications Company

SP-225 Sheet 1A
2nd printing

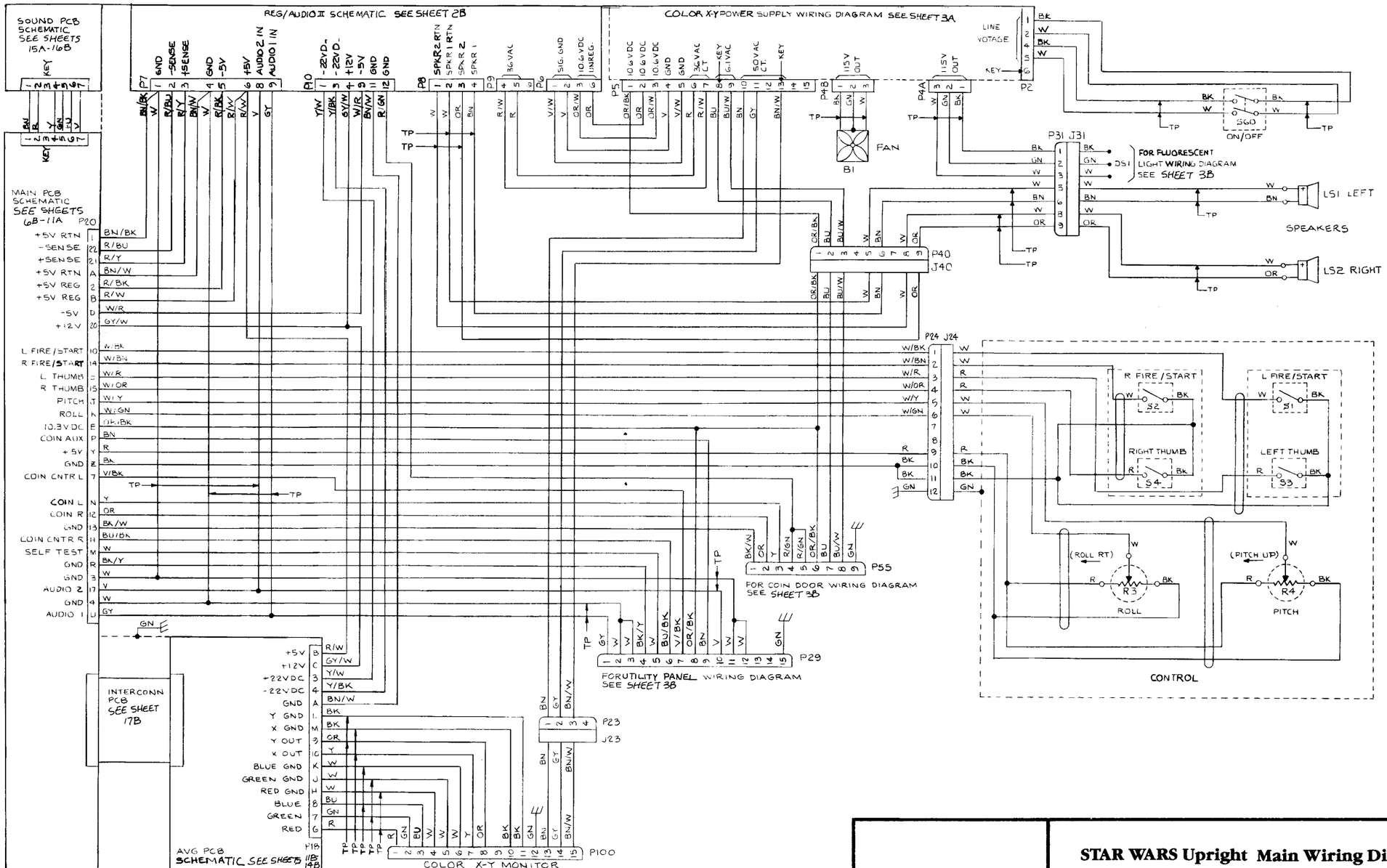

STAR WARS Upright Main Wiring Diagram

ATARI®

A Warner Communications Company

© ATARI INC. 1983

SP-225 Sheet 1B
2nd printing

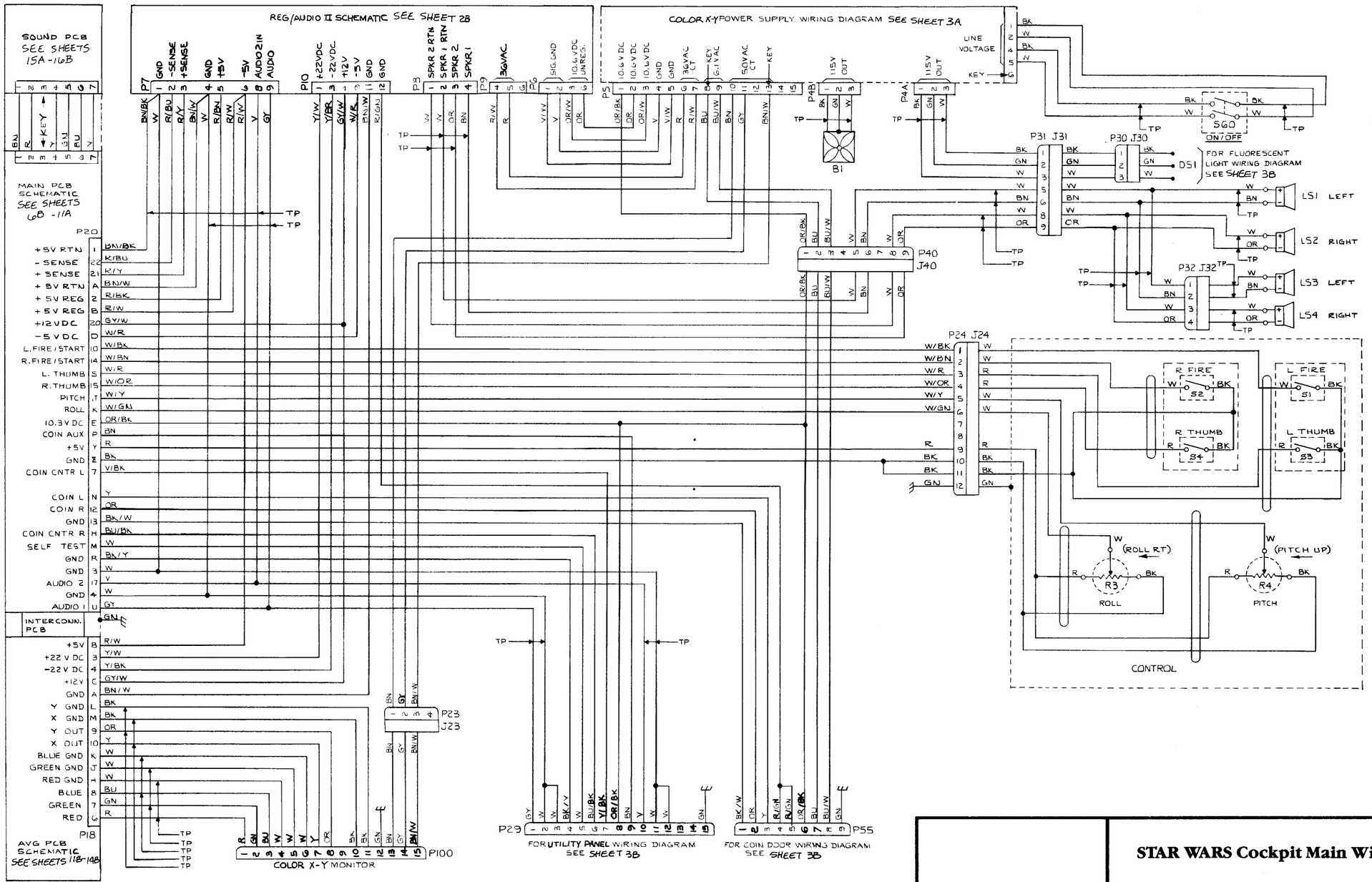

STAR WARS Cockpit Main Wiring Diagram

ATARI®
A Warner Communications Company

© ATARI INC. 1983

SP-225 Sheet 2A
2nd printing

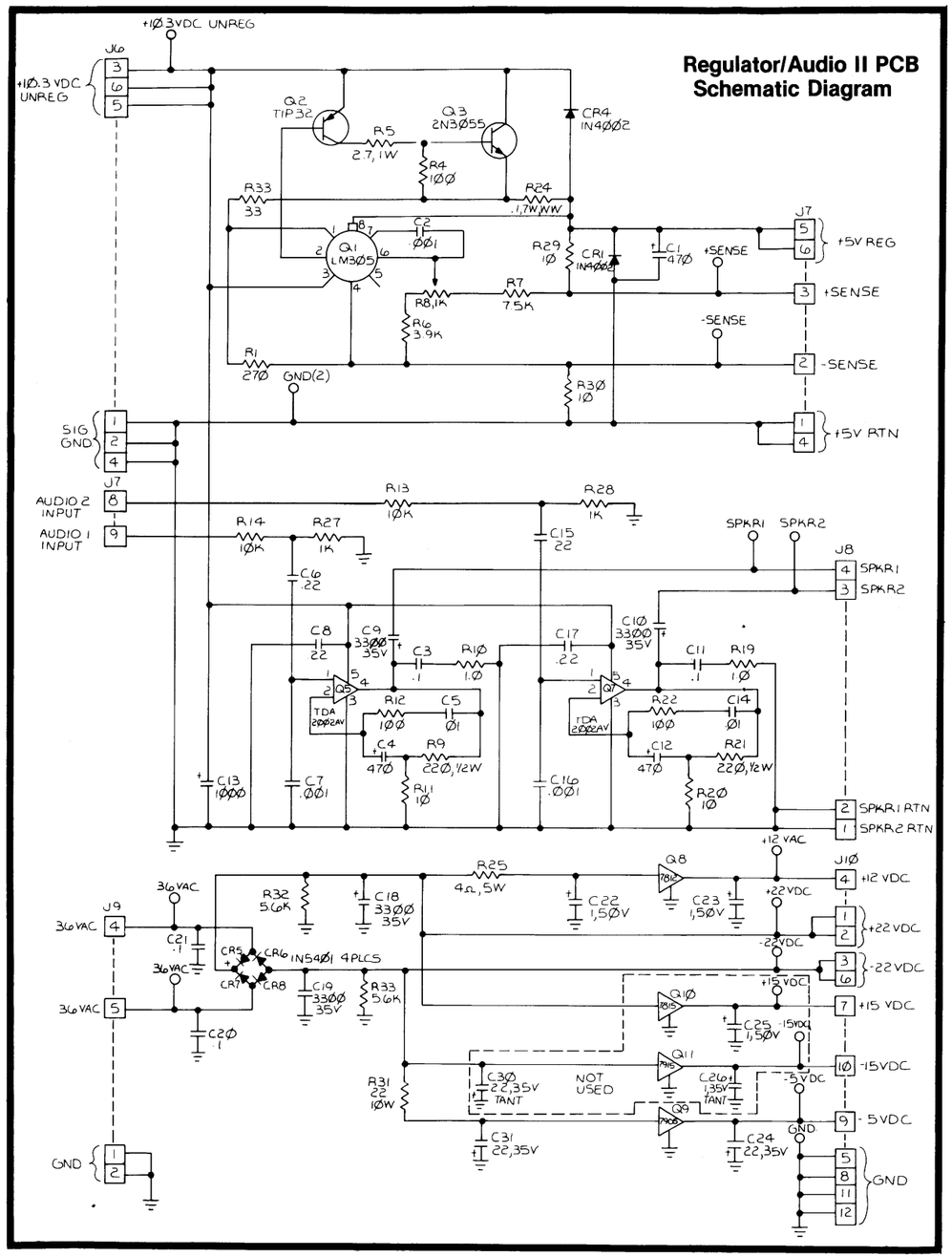

STAR WARS Regulator/Audio II PCB

ATARI®

A Warner Communications Company

© ATARI INC. 1983

SP-225 Sheet 2B
2nd printing

Color X-Y Power Supply Wiring Diagram

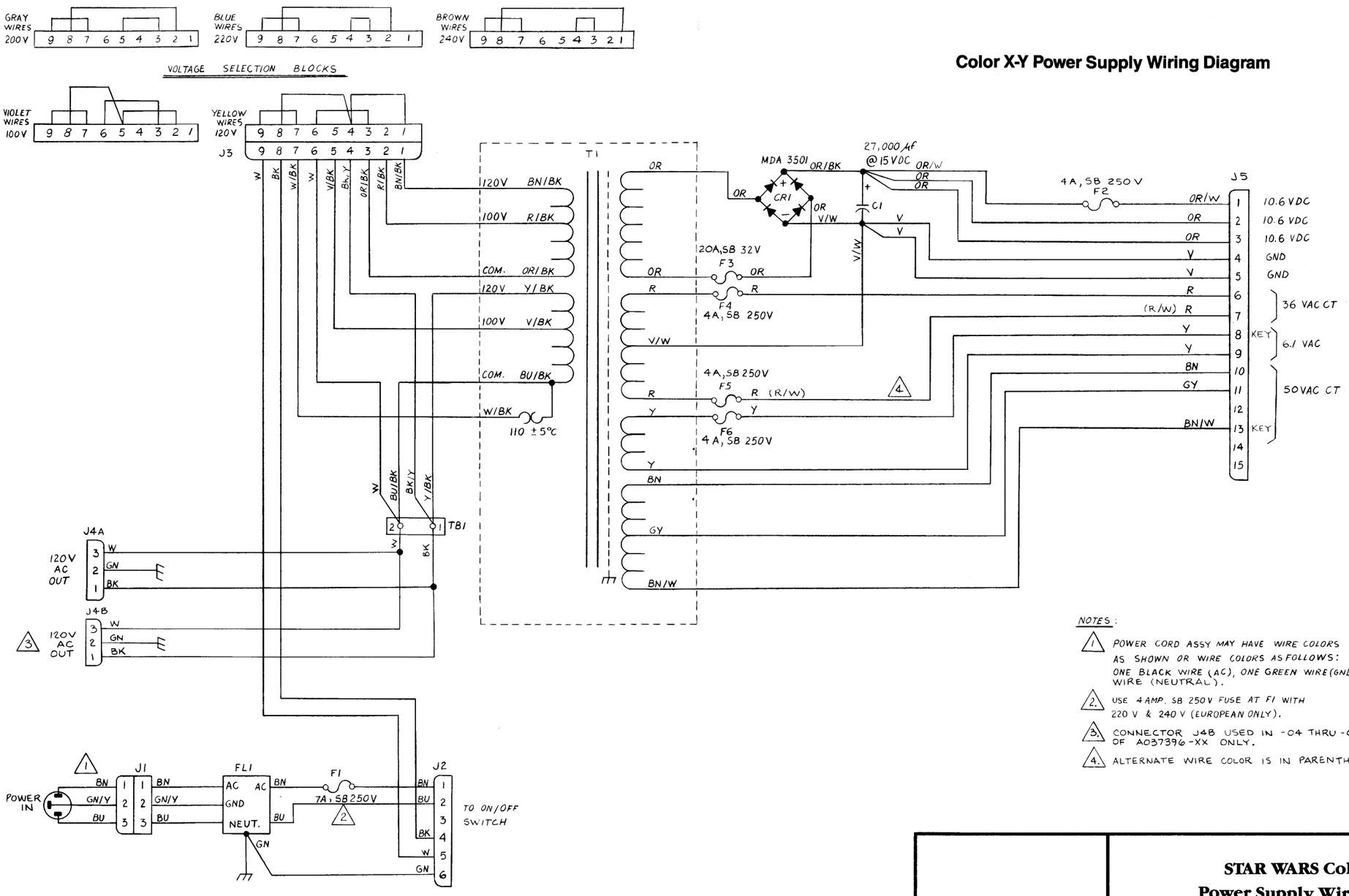

STAR WARS Color X-Y
Power Supply Wiring Diagram

ATARI®
A Warner Communications Company

© ATARI INC. 1983

SP-225 Sheet 3A
2nd printing

Fluorescent Light Wiring Diagram

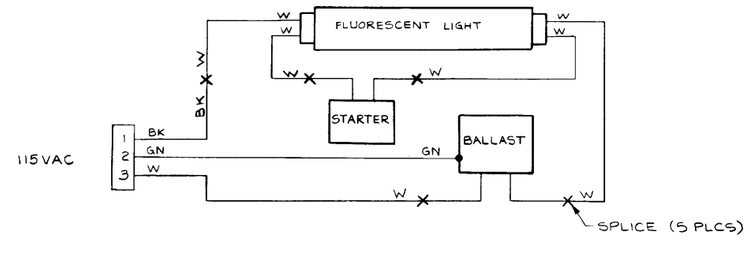

Coin Door Wiring Diagram

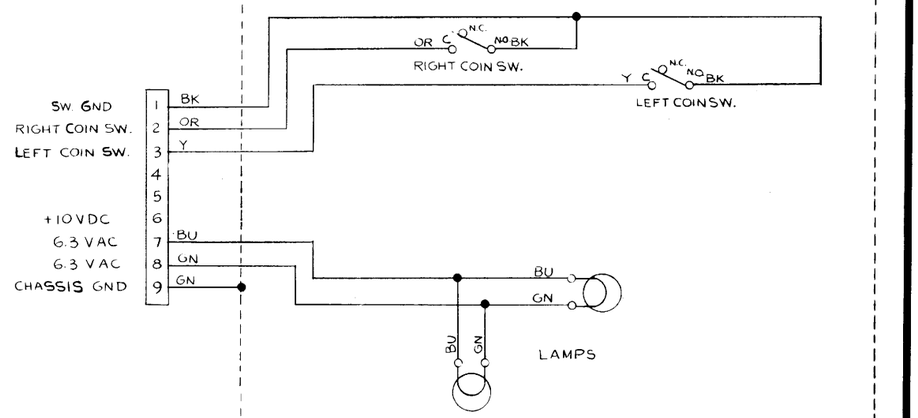

Utility Panel Wiring Diagram

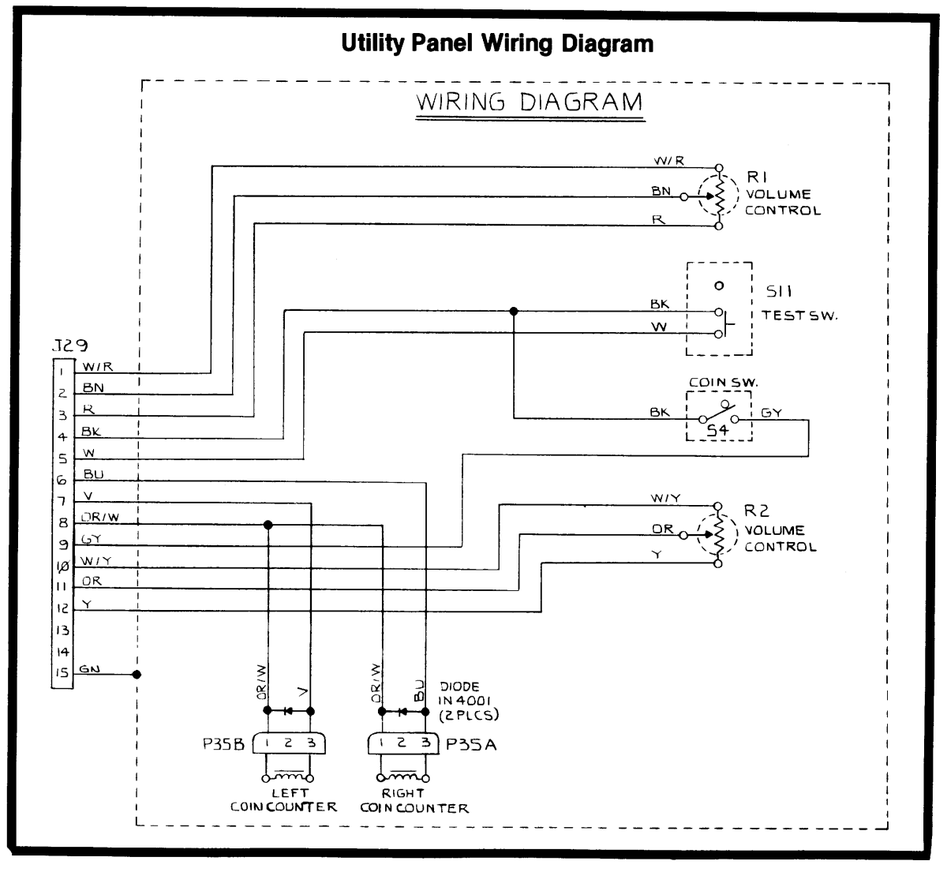

STAR WARS Game Interfaces

ATARI®

A Warner Communications Company

© ATARI INC. 1983

SP-225 Sheet 3B
2nd printing

Main PCB

HEXA-DECIMAL ADDRESS	A15	A14	A13	A12	A11	A10	A9	A8	A7	A6	A5	A4	A3	A2	A1	A0	READ/ WRITE	D7	D6	D5	D4	D3	D2	D1	D0	FUNCTION
0000–07FF	0	0	0	0	0	A	A	A	A	A	A	A	A	A	A	A	R/W	D	D	D	D	D	D	D	D	VRAM0
0800–0FFF	0	0	0	0	1	A	A	A	A	A	A	A	A	A	A	A	R/W	D	D	D	D	D	D	D	D	VRAM1
1000–17FF	0	0	0	1	0	A	A	A	A	A	A	A	A	A	A	A	R/W	D	D	D	D	D	D	D	D	VRAM2
1800–1FFF	0	0	0	1	1	A	A	A	A	A	A	A	A	A	A	A	R/W	D	D	D	D	D	D	D	D	VRAM3
2000–27FF	0	0	1	0	0	A	A	A	A	A	A	A	A	A	A	A	R/W	D	D	D	D	D	D	D	D	VRAM4
2800–2FFF	0	0	1	0	1	A	A	A	A	A	A	A	A	A	A	A	R/W	D	D	D	D	D	D	D	D	VRAM5
3000–3FFF	0	0	1	1	A	A	A	A	A	A	A	A	A	A	A	A	R	D	D	D	D	D	D	D	D	VROM
4300	0	1	0	0	0	0	1	1	0	0	0						R	D								LEFT F/S
	0	1	0	0	0	0	1	1	0	0	0						R		D							RIGHT F/S
	0	1	0	0	0	0	1	1	0	0	0						R			D						SPARE 1
	0	1	0	0	0	0	1	1	0	0	0						R				D					SELF-TEST
	0	1	0	0	0	0	1	1	0	0	0						R					D				SLAM
	0	1	0	0	0	0	1	1	0	0	0						R						D			COIN AUX
	0	1	0	0	0	0	1	1	0	0	0						R							D		COIN L
	0	1	0	0	0	0	1	1	0	0	0						R								D	COIN R
4320	0	1	0	0	0	0	1	1	0	0	1						R	D								MATH RUN
	0	1	0	0	0	0	1	1	0	0	1						R		D							VGHALT
	0	1	0	0	0	0	1	1	0	0	1						R			D						LEFT THUMB
	0	1	0	0	0	0	1	1	0	0	1						R				D					RIGHT THUMB
	0	1	0	0	0	0	1	1	0	0	1						R					D				SPARE 2
	0	1	0	0	0	0	1	1	0	0	1						R						D			DIAGN
	0	1	0	0	0	0	1	1	0	0	1						R							D		Unused
	0	1	0	0	0	0	1	1	0	0	1						R								D	Unused
4340	0	1	0	0	0	0	1	1	0	1	0						R	D	D	D	D	D	D	D	D	OPT 0
4360	0	1	0	0	0	0	1	1	0	1	1						R	D	D	D	D	D	D	D	D	OPT 1
4380	0	1	0	0	0	0	1	1	1	0	0						R	D	D	D	D	D	D	D	D	ADC
4400	0	1	0	0	0	1	0	0								0	R	D	D	D	D	D	D	D	D	MAINREAD
	0	1	0	0	0	1	0	0								0	W	D	D	D	D	D	D	D	D	MAINWR
4401	0	1	0	0	0	1	0	0								1	R	D								MAIN READY FLAG
	0	1	0	0	0	1	0	0								1	R		D							SOUND READY FLAG
4500–45FF	0	1	0	0	0	1	0	1	A	A	A	A	A	A	A	A	R/W					D	D	D	D	NOVRAM

HEXA-DECIMAL ADDRESS	A15	A14	A13	A12	A11	A10	A9	A8	A7	A6	A5	A4	A3	A2	A1	A0	READ/ WRITE	D7	D6	D5	D4	D3	D2	D1	D0	FUNCTION
4600	0	1	0	0	0	1	1	0	0	0	0						W									EVGGO
4620	0	1	0	0	0	1	1	0	0	0	1						W									EVGRES
4640	0	1	0	0	0	1	1	0	0	1	0						W									WDCLR
4660	0	1	0	0	0	1	1	0	0	1	1						W									IRQCLR
4680	0	1	0	0	0	1	1	0	1	0	0			0	0	0	W	D								COIN CNTR 2
4681	0	1	0	0	0	1	1	0	1	0	0			0	0	1	W	D								COIN CNTR 1
4682	0	1	0	0	0	1	1	0	1	0	0			0	1	0	W	D								LED 3
4683	0	1	0	0	0	1	1	0	1	0	0			0	1	1	W	D								LED2
4684	0	1	0	0	0	1	1	0	1	0	0			1	0	0	W	D								MPAGE
4685	0	1	0	0	0	1	1	0	1	0	0			1	0	1	W	D								PRNGCLR
4686	0	1	0	0	0	1	1	0	1	0	0			1	1	0	W	D								LED 1
4687	0	1	0	0	0	1	1	0	1	0	0			1	1	1	W	D								RECALL
46A0	0	1	0	0	0	1	1	0	1	0	1						W									NSTORE
46C0	0	1	0	0	0	1	1	0	1	1	0				0	0	W									ADCSTART 0
46C1	0	1	0	0	0	1	1	0	1	1	0				0	1	W									ADCSTART 1
46C2	0	1	0	0	0	1	1	0	1	1	0				1	0	W									ADCSTART 2
46E0	0	1	0	0	0	1	1	0	1	1	1						W									SOUNDRST
4700	0	1	0	0	0	1	1	1						0	0	0	R	D	D	D	D	D	D	D	D	REH
	0	1	0	0	0	1	1	1						0	0	0	W	D	D	D	D	D	D	D	D	MWO
4701	0	1	0	0	0	1	1	1						0	0	1	R	D	D	D	D	D	D	D	D	REL
	0	1	0	0	0	1	1	1						0	0	1	W								D	MW1
4702	0	1	0	0	0	1	1	1						0	1	0	W	D	D	D	D	D	D	D	D	MW2
4703	0	1	0	0	0	1	1	1						0	1	1	R	D	D	D	D	D	D	D	D	PRNG
4704	0	1	0	0	0	1	1	1						1	0	0	W	D	D	D	D	D	D	D	D	DVSRH
4705	0	1	0	0	0	1	1	1						1	0	1	W	D	D	D	D	D	D	D	D	DVSRL
4706	0	1	0	0	0	1	1	1						1	1	0	W	D	D	D	D	D	D	D	D	DVDDH
4707	0	1	0	0	0	1	1	1						1	1	1	W	D	D	D	D	D	D	D	D	DVDDL
4800–4FFF	0	1	0	0	1	A	A	A	A	A	A	A	A	A	A	A	R/W	D	D	D	D	D	D	D	D	RAM
5000–5FFF	0	1	0	1	A	A	A	A	A	A	A	A	A	A	A	A	R/W	D	D	D	D	D	D	D	D	MBRAM
6000–7FFF	0	1	1	A	A	A	A	A	A	A	A	A	A	A	A	A	R	D	D	D	D	D	D	D	D	ROM 0
8000–9FFF	1	0	0	A	A	A	A	A	A	A	A	A	A	A	A	A	R	D	D	D	D	D	D	D	D	ROM 1
A000–BFFF	1	0	1	A	A	A	A	A	A	A	A	A	A	A	A	A	R	D	D	D	D	D	D	D	D	ROM 2
C000–DFFF	1	1	0	A	A	A	A	A	A	A	A	A	A	A	A	A	R	D	D	D	D	D	D	D	D	ROM 3
E000–FFFF	1	1	1	A	A	A	A	A	A	A	A	A	A	A	A	A	R	D	D	D	D	D	D	D	D	ROM 4

STAR WARS Memory Map -part 1

ATARI®

A Warner Communications Company

© ATARI INC. 1983

SP-225 Sheet 4A
2nd printing

Sound PCB

HEXA-DECIMAL ADDRESS	ADDRESS BUS SIGNAL LINES A15	A14	A13	A12	A11	A10	A9	A8	A7	A6	A5	A4	A3	A2	A1	A0	READ/ WRITE	DATA BUS SIGNAL LINES D7	D6	D5	D4	D3	D2	D1	D0	FUNCTION
0000	0	0	0	0													W	D	D	D	D	D	D	D	D	SOUT
0800	0	0	0	1													R	D	D	D	D	D	D	D	D	SIN
1000–107F	0	0	1	0					0	A	A	A	A	A	A	A	R/W	D	D	D	D	D	D	D	D	PIA (RAM)
1080	0	0	1	0					1					0	0	0	R/W	D	D	D	D	D	D	D	D	PIA (PORT A DATA)
1081	0	0	1	0					1					0	0	1	R/W	D	D	D	D	D	D	D	D	PIA (PORT A DIR)
1082	0	0	1	0					1					0	1	0	R/W	D	D	D	D	D	D	D	D	PIA (PORT B DATA)
1083	0	0	1	0					1					0	1	1	R/W	D	D	D	D	D	D	D	D	PIA (PORT B DIR)
1084–109F	0	0	1	0					1				A	1	A	A	R/W	D	D	D	D	D	D	D	D	PIA (CONTROL)
1800–1807	0	0	1	1							0	0	0	A	A	A	R/W	D	D	D	D	D	D	D	D	CIO-0 (SOUND)
1808–180F	0	0	1	1							0	0	1	A	A	A	R/W	D	D	D	D	D	D	D	D	CIO-1 (SOUND)
1810–1817	0	0	1	1							0	1	0	A	A	A	R/W	D	D	D	D	D	D	D	D	CIO-2 (SOUND)
1818–181F	0	0	1	1							0	1	1	A	A	A	R/W	D	D	D	D	D	D	D	D	CIO-3 (SOUND)
1820–1827	0	0	1	1							1	0	0	A	A	A	R/W	D	D	D	D	D	D	D	D	CIO-0 (CONTROL)
1828–182F	0	0	1	1							1	0	1	A	A	A	R/W	D	D	D	D	D	D	D	D	CIO-1 (CONTROL)
1830–1837	0	0	1	1							1	1	0	A	A	A	R/W	D	D	D	D	D	D	D	D	CIO-2 (CONTROL)
1838–183F	0	0	1	1							1	1	1	A	A	A	R/W	D	D	D	D	D	D	D	D	CIO-3 (CONTROL)
2000–27FF	0	1			A	A	A	A	A	A	A	A	A	A	A	A	R/W	D	D	D	D	D	D	D	D	PROGRAM RAM
4000–5FFF	1	0	A	A	A	A	A	A	A	A	A	A	A	A	A	A	R	D	D	D	D	D	D	D	D	SROM0
6000–7FFF	1	1	A	A	A	A	A	A	A	A	A	A	A	A	A	A	R	D	D	D	D	D	D	D	D	SROM1

STAR WARS Memory Map -part 2

ATARI®

A Warner Communications Company

© ATARI INC. 1983

SP-225 Sheet 4B
2nd printing

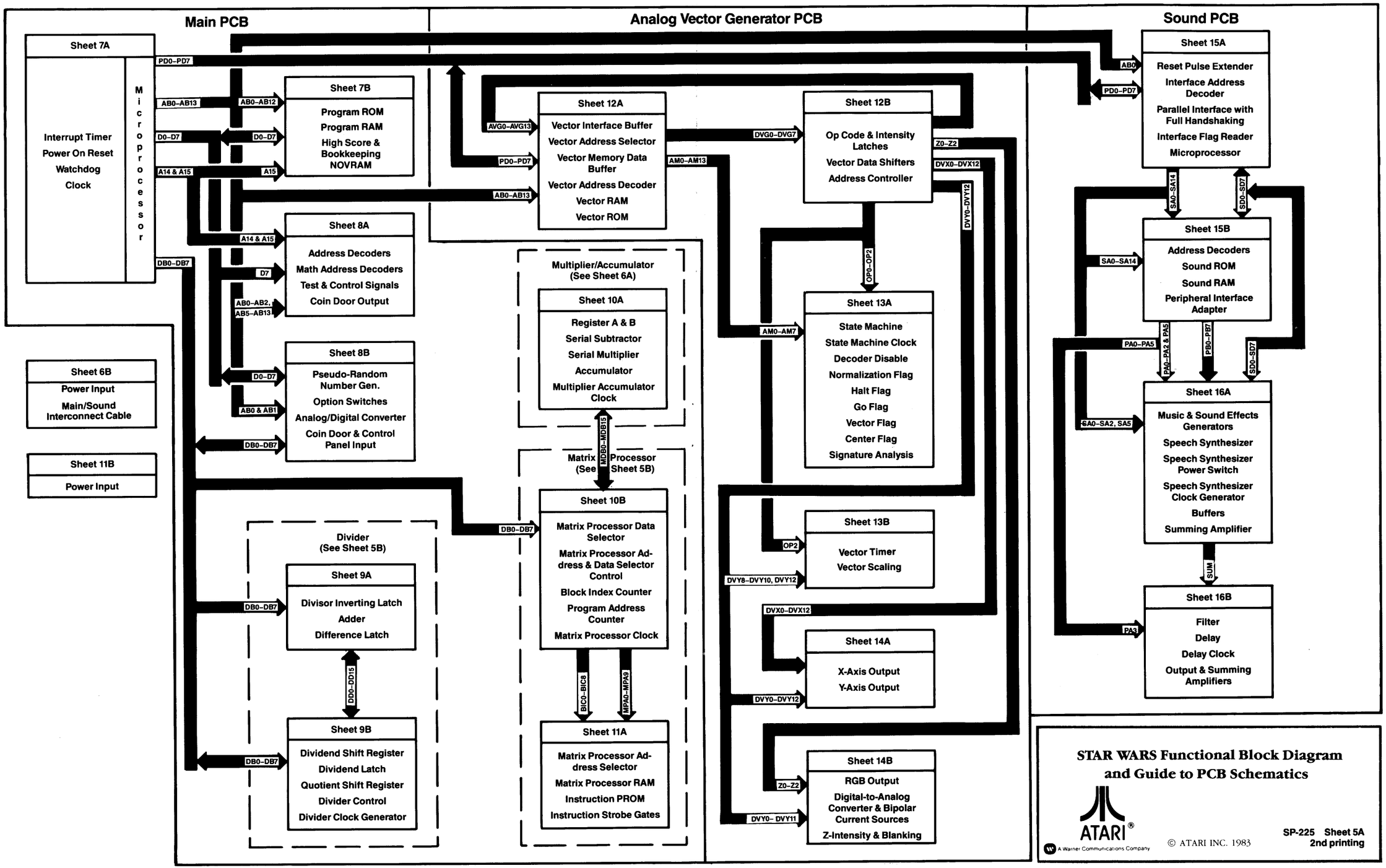

STAR WARS Functional Block Diagram and Guide to PCB Schematics

ATARI®

A Warner Communications Company

© ATARI INC. 1983

SP-225 Sheet 5A
2nd printing

Divider

(Control)

Dividend Shift Register (16 Bits)

DD0–DD15

From Microprocessor (see Sheet 7A)

DB0–DB7

DVSRH

DVSRL

Divisor Inverting Latch (16 Bits)

Divisor

Adder (16 Bits)

Cout Σ15 Σ14 Σ0 C in

"1"

"0"

Difference Latch (17 Bits)

C16*

OE

(Control)

DD0–DD15

Quotient Shift Register (16 Bits)

(Control)

REH (QUOH)

REL (QUOL)

DB0–DB7

Dividend Latch (16 Bits)

DD0–DD15

DB0–DB7

DVDDL

DVDDH

Divider Clock Generator

(Control)

Divider Control

(Control)

AB0–AB2

Timing

Math Address Decoders

DVDDH

DVDDL

DVSRH

DVSRL

REH (QUOH)

REL (QUOL)

Matrix Processor

To Multiplier/Accumulator (See Sheet 6A)

MDB0–MDB15

DB0–DB7

(Control)

Matrix Processor Data Selector

MDB0–MDB15

Data

Matrix Processor RAM (2K x 16)

AB1–AB15

IP0–IP6

Matrix Processor Address Selector

MA0–MA10

Address

(Control)

(Control)

BIC0–BIC8

Block Index Counter (9 Bits)

DB0–DB7

(Control)

DB0–DB7

(Control)

Program Address Counter (8 Bits x 4 Pages)

MPA0–MPA9

Instruction PROM Address (1K x 16)

IP0–IP15

IP8–IP15

Instruction Strobe Gates

(Instruction Controls)

Write Pulse

(Control)

Matrix Processor Clock

(Control)

STAR WARS Divider and Matrix Processor
Detailed Block Diagrams

ATARI®

A Warner Communications Company

© ATARI INC. 1983

SP-225 Sheet 5B
2nd printing

Multiplier/Accumulator
ACC = ACC + (A−B) × C

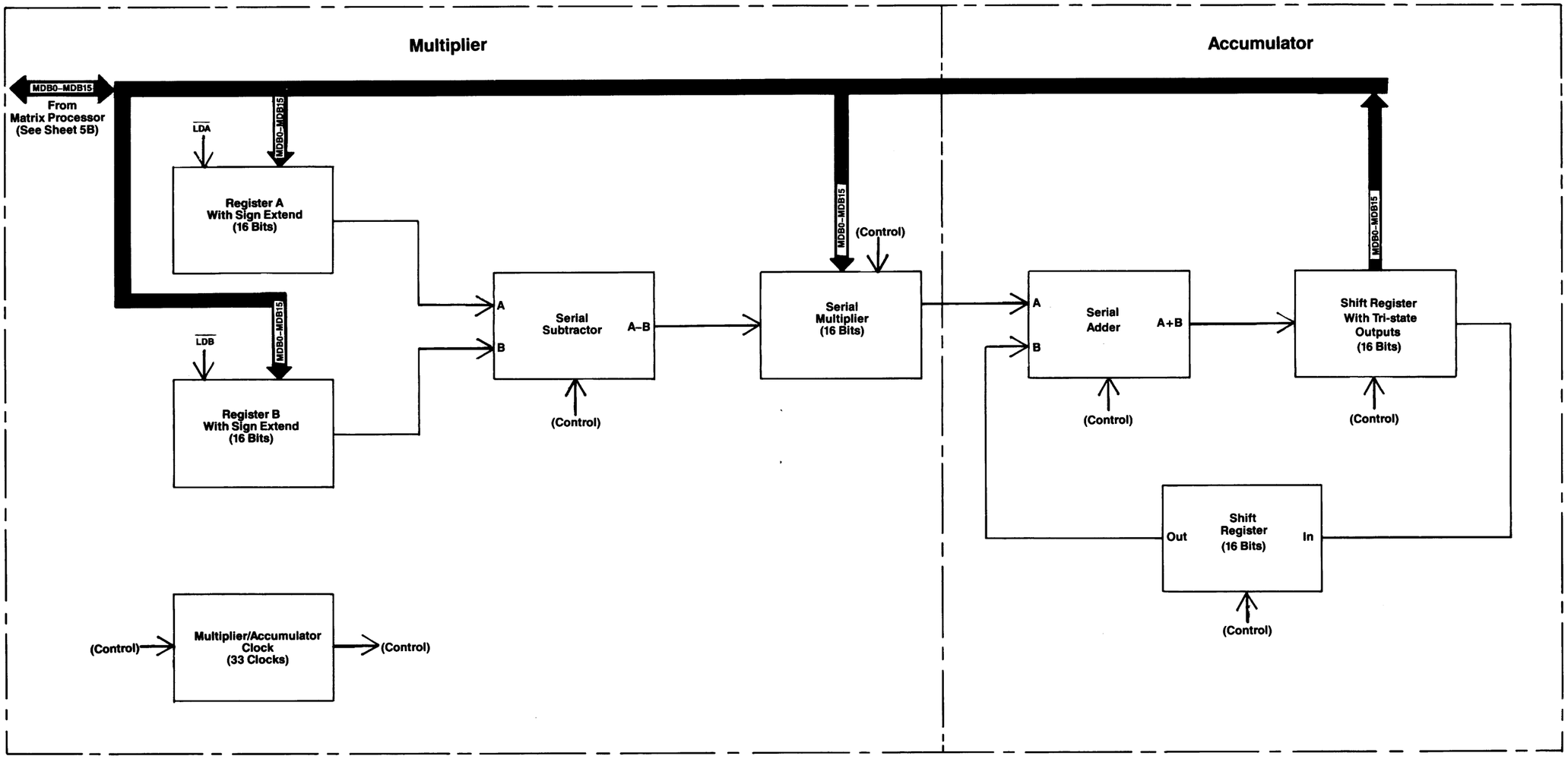

STAR WARS Multiplier/Accumulator
Detailed Block Diagram

ATARI®
A Warner Communications Company

© ATARI INC. 1983

SP-225 Sheet 6A
2nd printing

Power Input

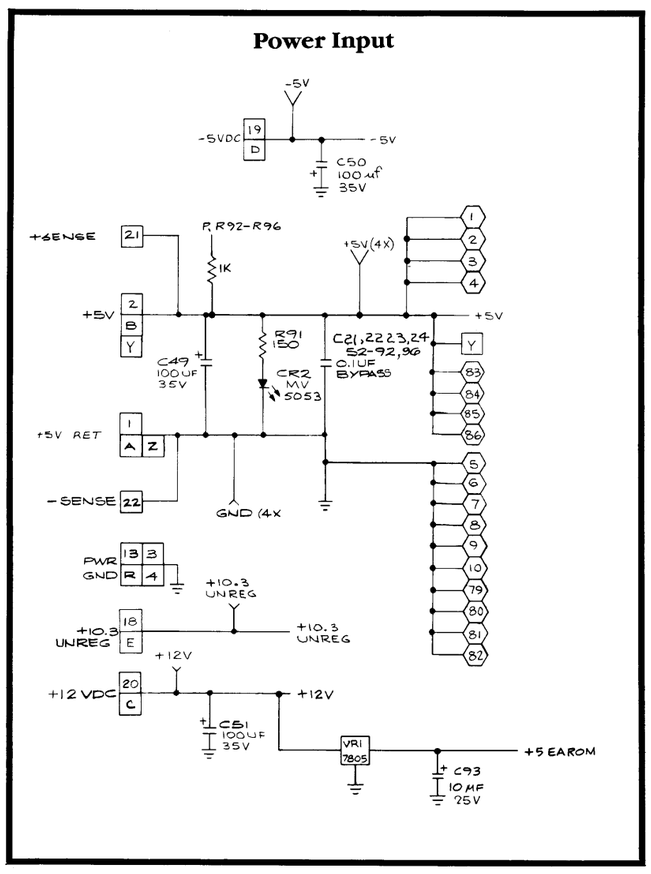

Main/Sound PCB Interconnect Cable

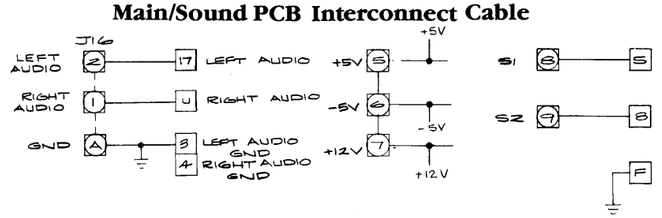

NOTE

- □ = J20 CONNECTOR
- ○ = TEST CONNECTOR
- ⬡ = J17 CONNECTOR
- ⊠ = J16 CONNECTOR

STAR WARS Main PCB

ATARI®

A Warner Communications Company

© ATARI INC. 1983

SP-225 Sheet 6B
2nd printing

Clock

Power-On Reset

Watchdog

Interrupt Timer

Microprocessor

STAR WARS Main PCB

ATARI®

A Warner Communications Company

© ATARI INC. 1983

SP-225 Sheet 7A
2nd printing

ROM

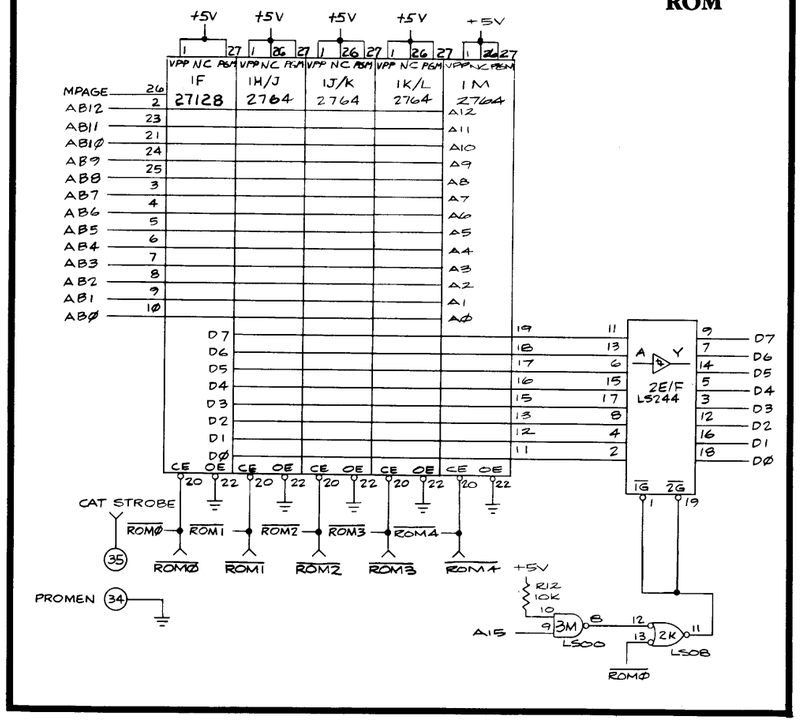

RAM

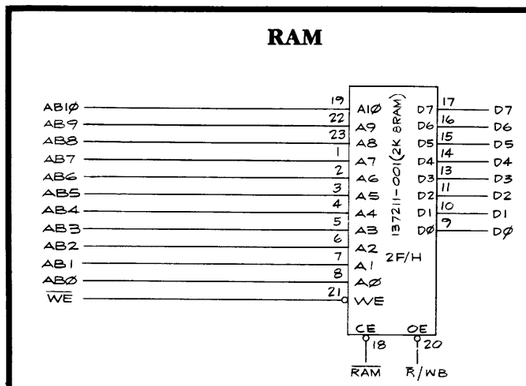

High-Score and Bookkeeping Non-Volatile RAM

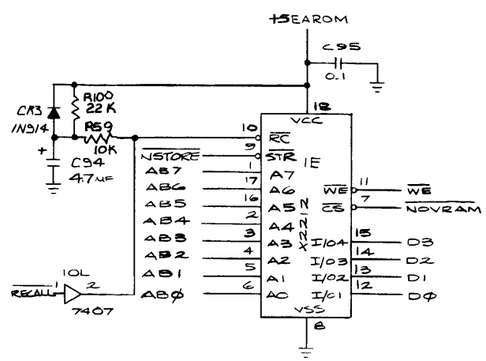

STAR WARS Main PCB

ATARI®

A Warner Communications Company

© ATARI INC. 1983

SP-225 Sheet 7B
2nd printing

Address Decoders

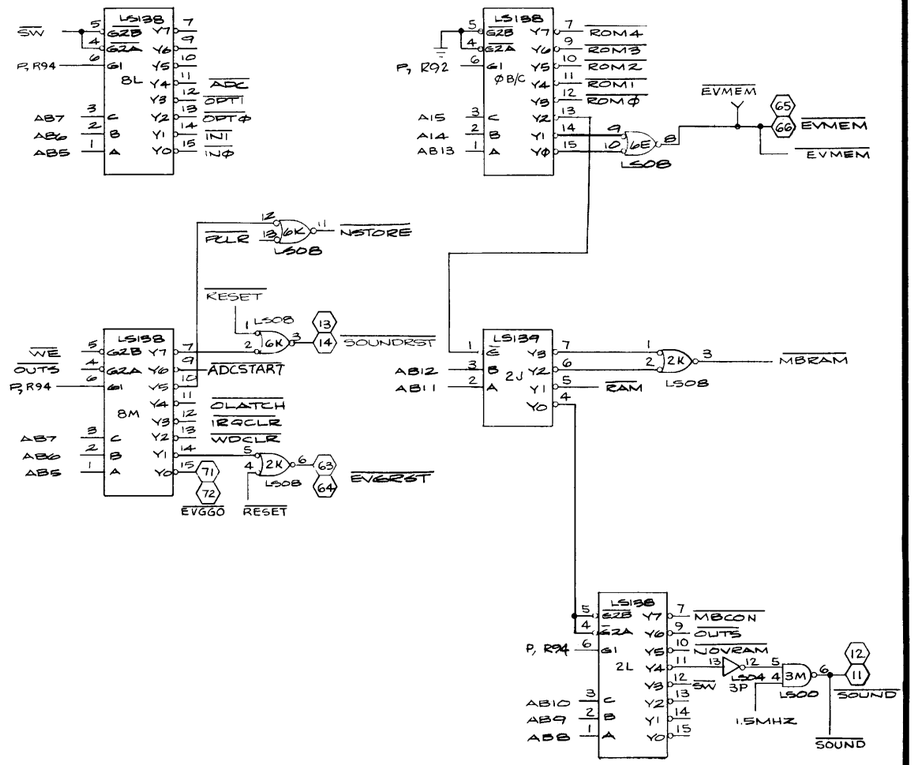

Math Address Decoders

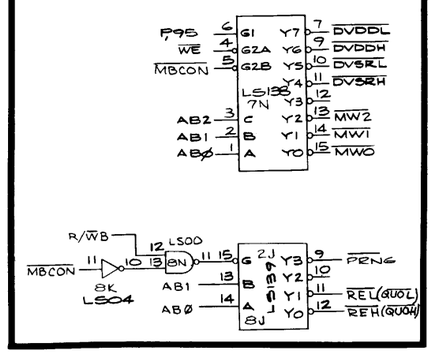

Test and Control Signals

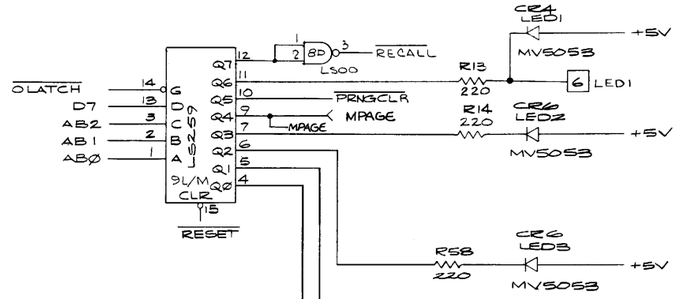

Coin Door Output

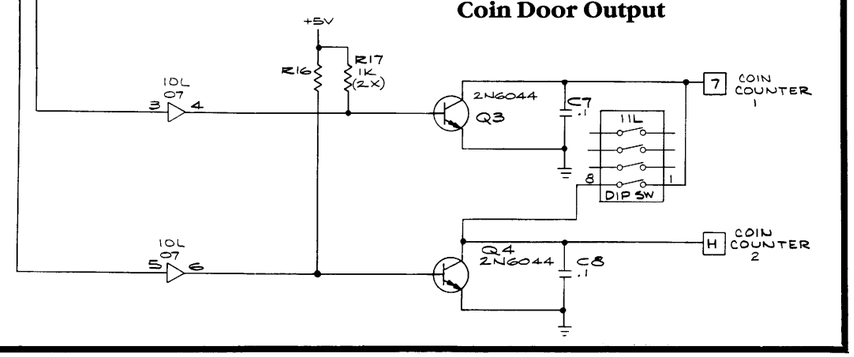

STAR WARS Main PCB

ATARI®

A Warner Communications Company

© ATARI INC. 1983

SP-225 Sheet 8A
2nd printing

Coin Door and Control Panel Input

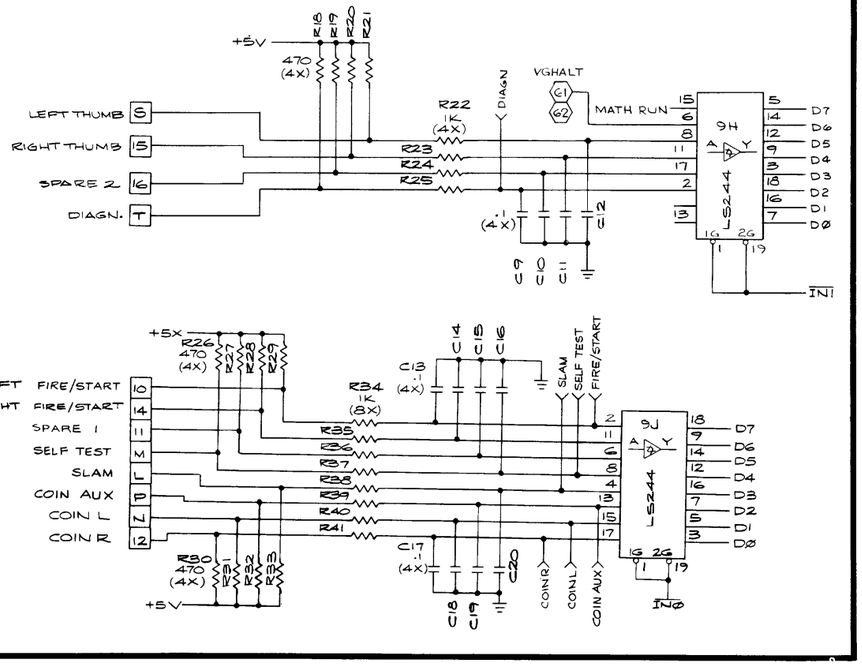

Analog/Digital Converter

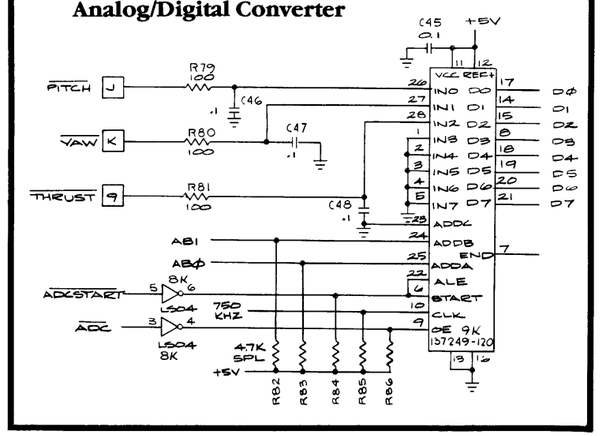

Pseudo-Random Number Generator

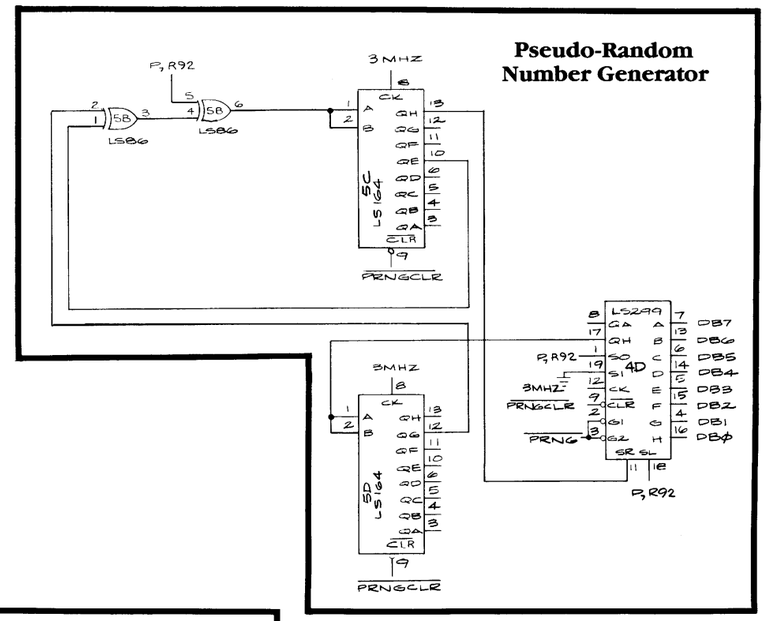

Option Switches

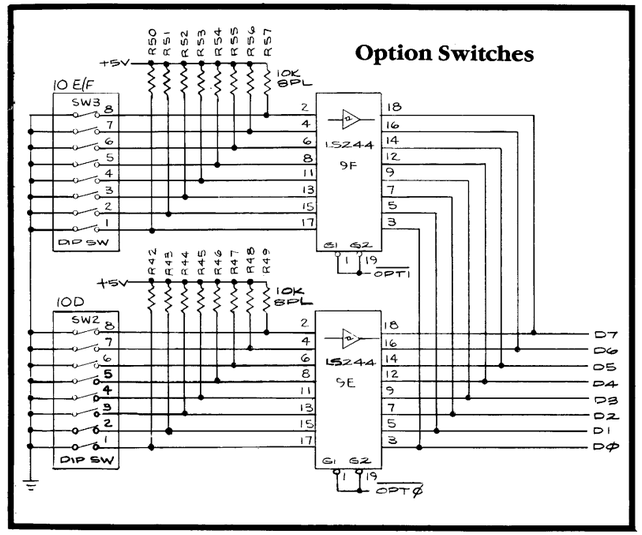

STAR WARS Main PCB

ATARI®

A Warner Communications Company

© ATARI INC. 1983

SP-225 Sheet 8B
2nd printing

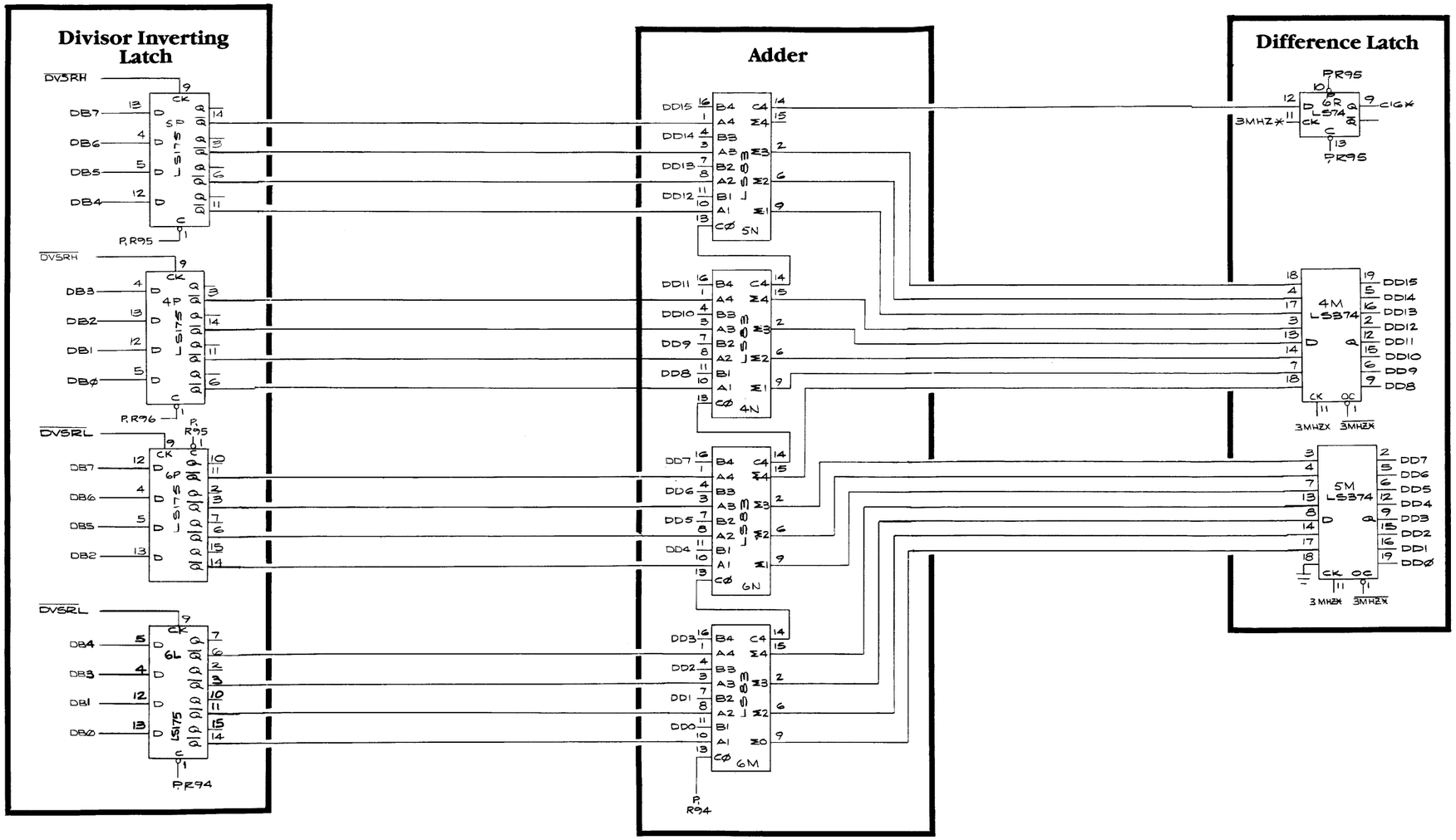

STAR WARS Main PCB

ATARI®

A Warner Communications Company

© ATARI INC. 1983

SP-225 Sheet 9A
2nd printing

Divider Clock Generator

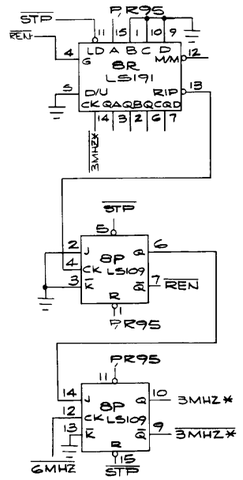

Quotient Shift Register

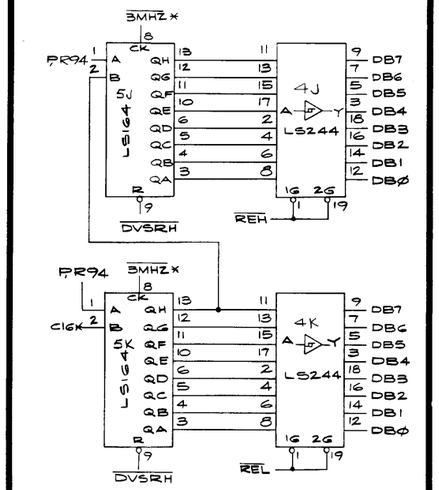

Divider Control

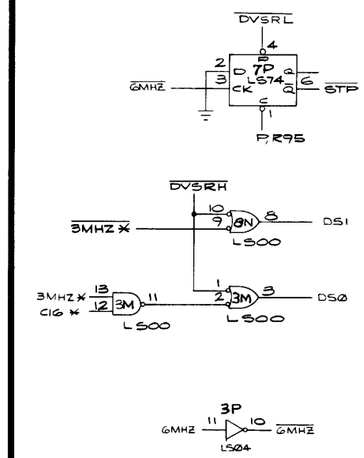

Dividend Shift Register

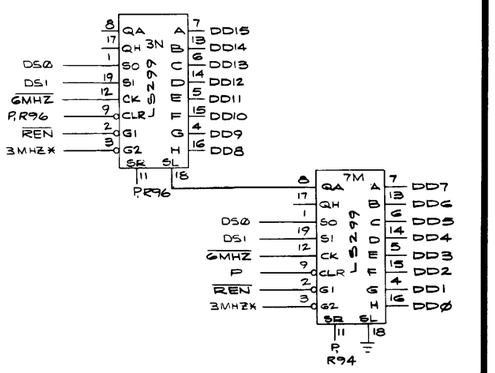

Dividend Latch

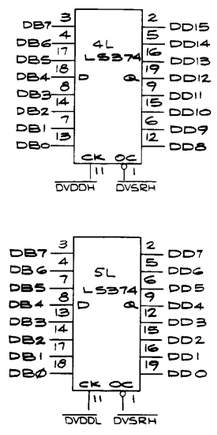

STAR WARS Main PCB

ATARI®

A Warner Communications Company

© ATARI INC. 1983

SP-225 Sheet 9B
2nd printing

Register A

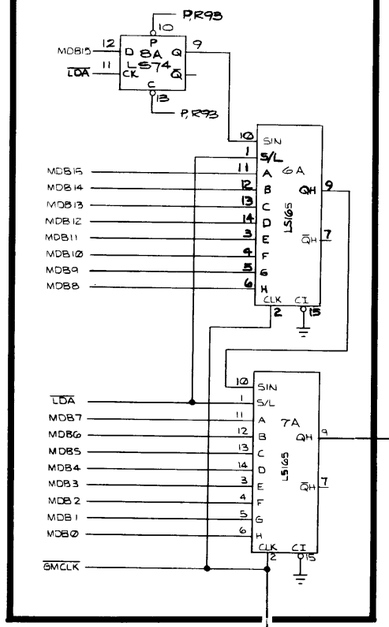

Accumulator

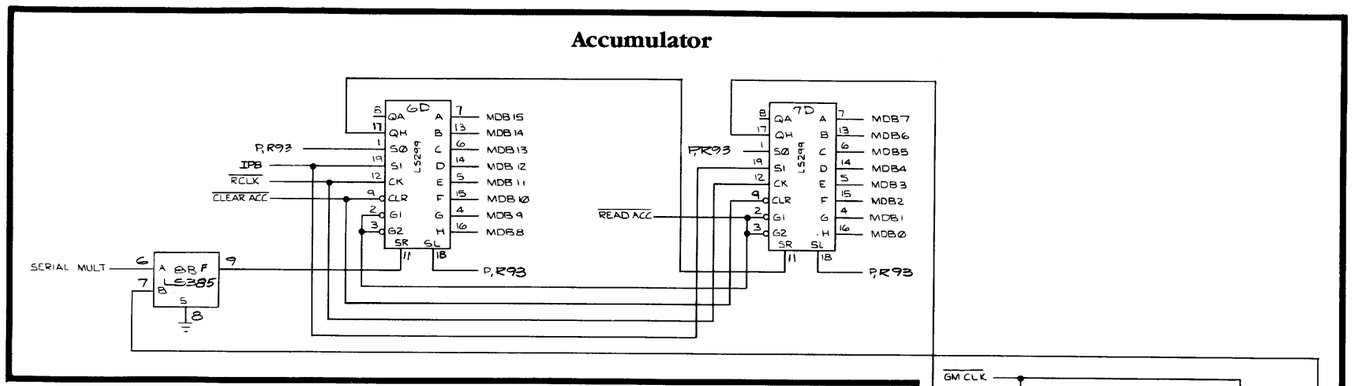

Serial Subtractor

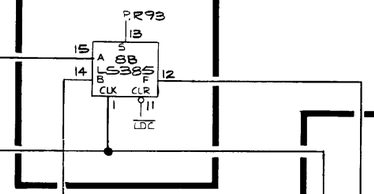

Register B

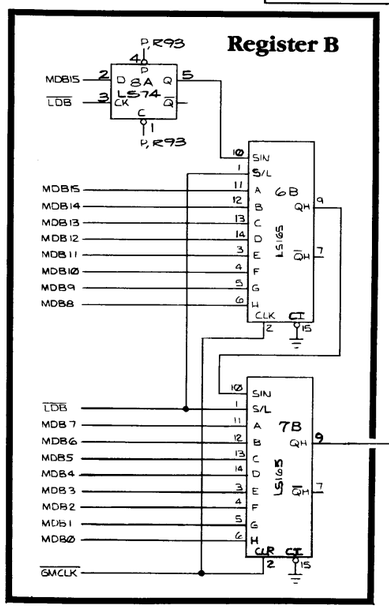

Serial Multiplier

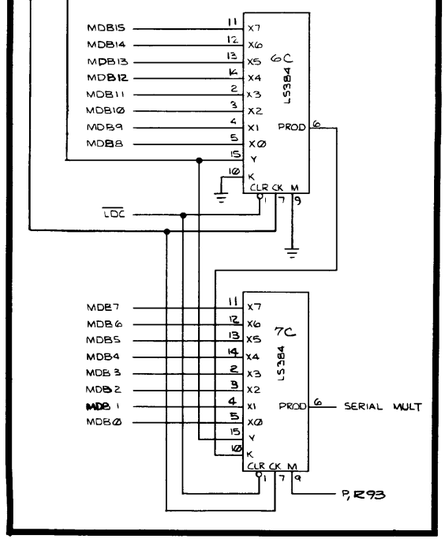

Multiplier/Accumulator Clock

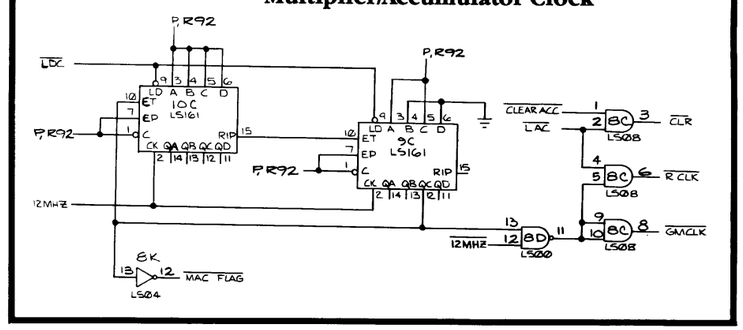

STAR WARS Main PCB

ATARI®

A Warner Communications Company

© ATARI INC. 1983

SP-225 Sheet 10A
2nd printing

Matrix Processor Clock

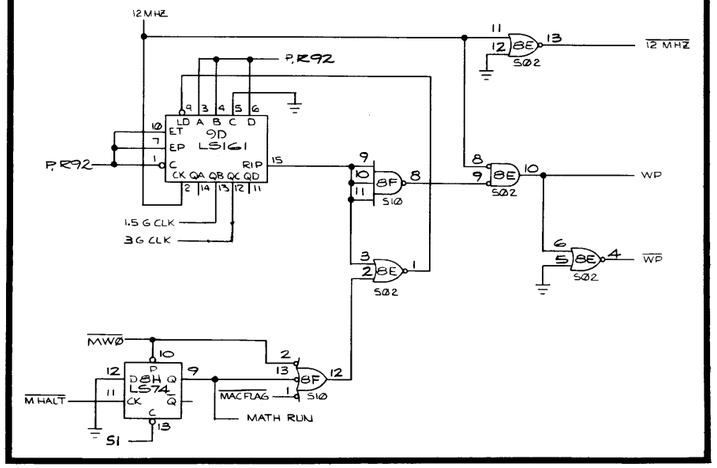

Matrix Processor Address Counter

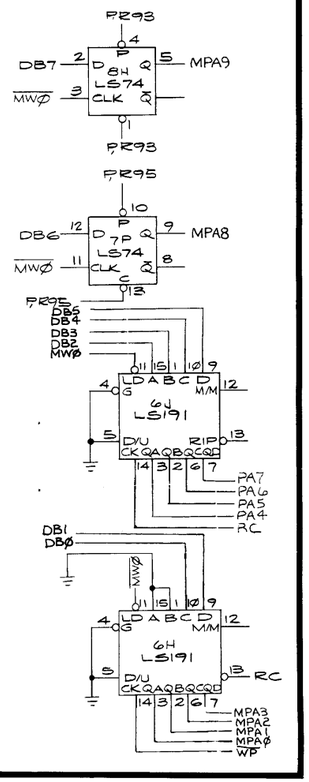

Matrix Processor Data Selector

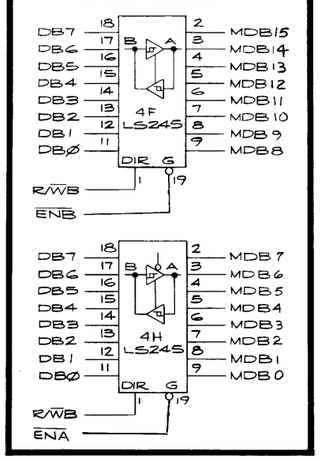

Block Index Counter

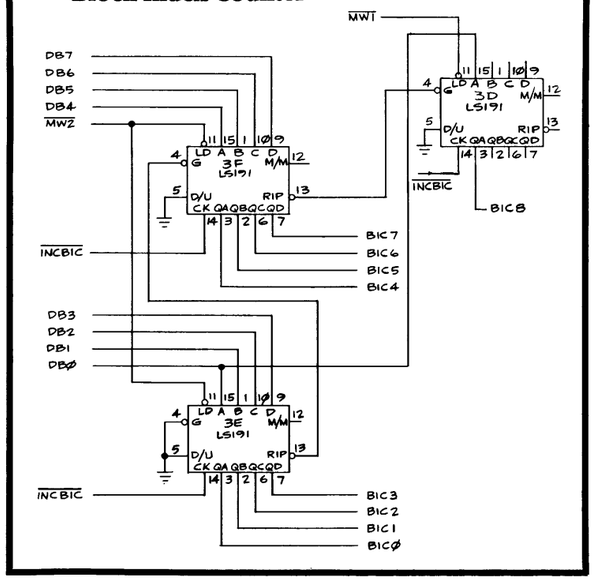

Matrix Processor Address and Data Selector Control

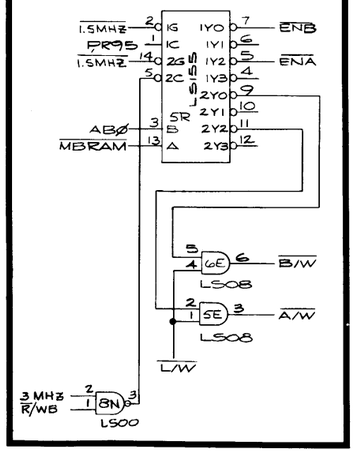

STAR WARS Main PCB

ATARI®

A Warner Communications Company

© ATARI INC. 1983

SP-225 Sheet 10B
2nd printing

Matrix Processor Address Selector

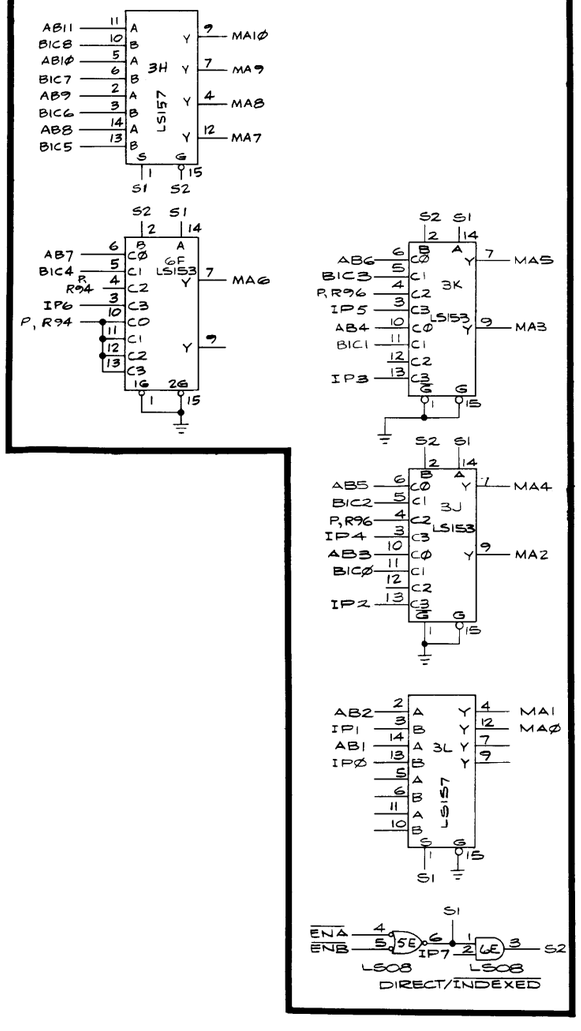

Matrix Processor RAM

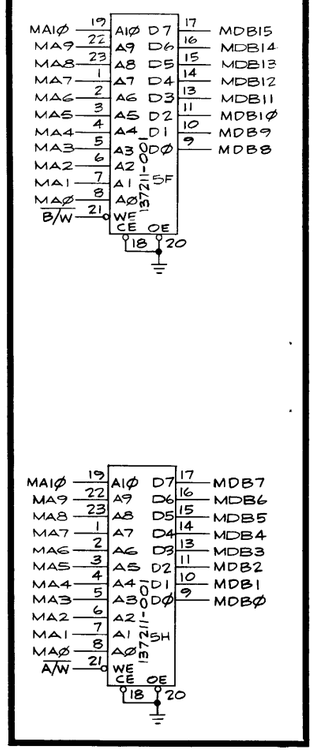

Instruction PROM

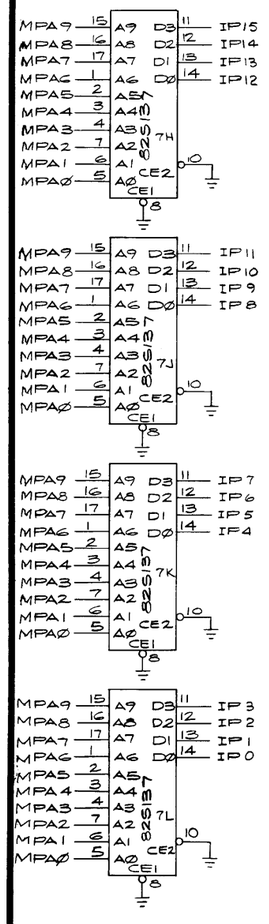

Instruction Strobe Gates

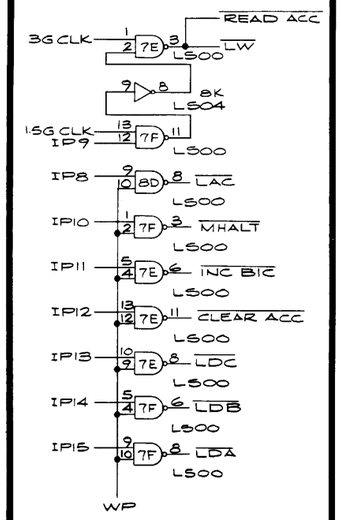

STAR WARS Main PCB

ATARI®

A Warner Communications Company

© ATARI INC. 1983

SP-225 Sheet 11A
2nd printing

Power Input

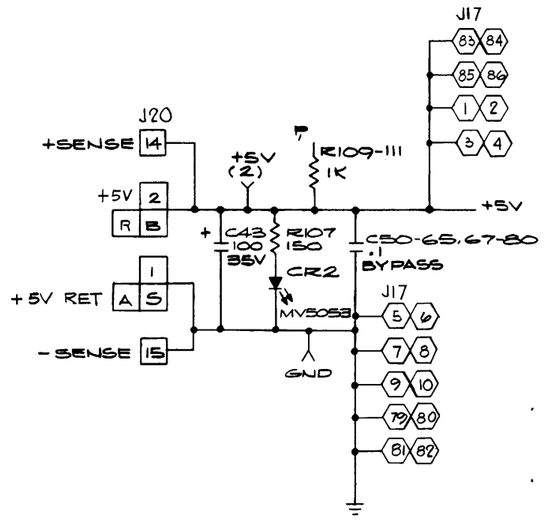

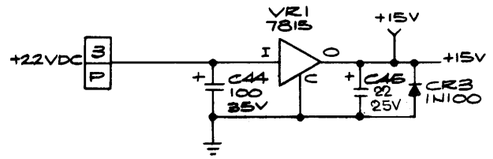

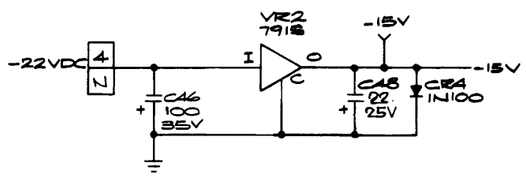

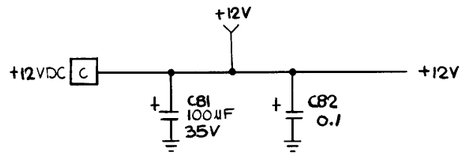

STAR WARS Analog Vector-Generator PCB

ATARI®
A Warner Communications Company

© ATARI INC. 1983

Vector Interface Buffer

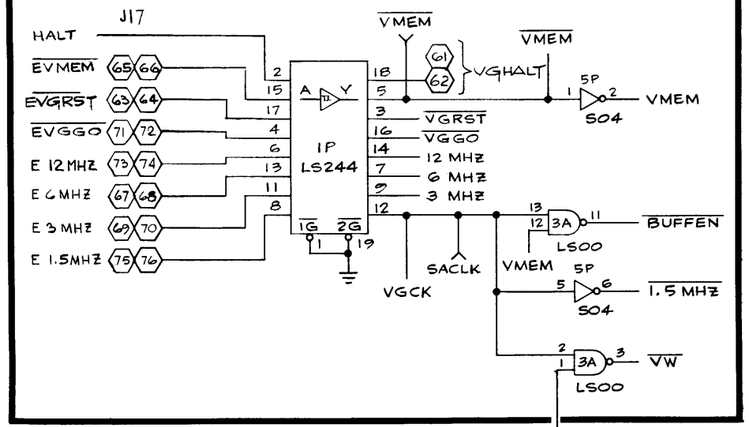

Vector Memory Data Buffer

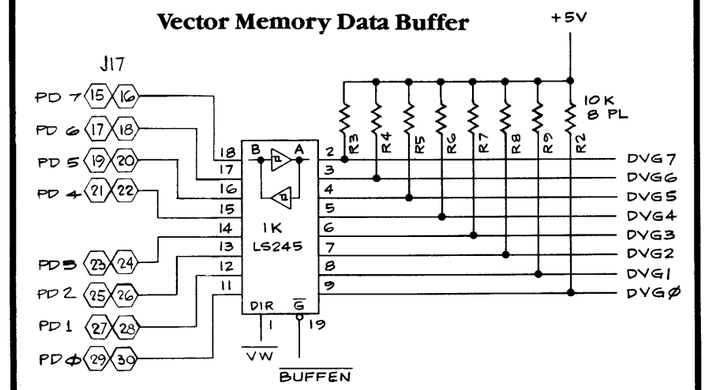

Vector Address Decoder

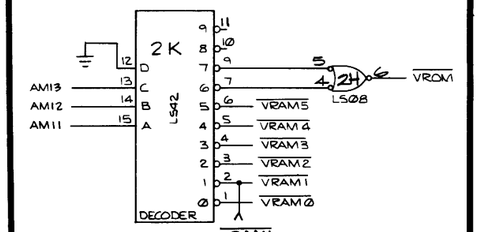

Vector ROM

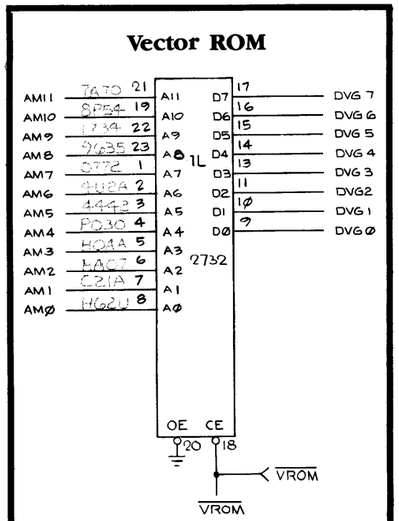

Vector Address Selector

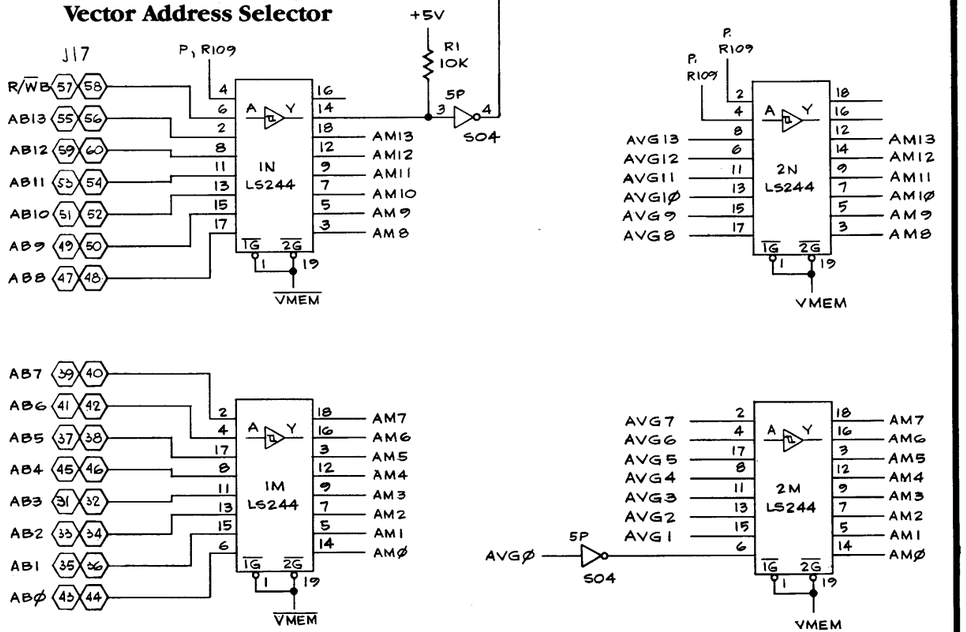

Vector RAM

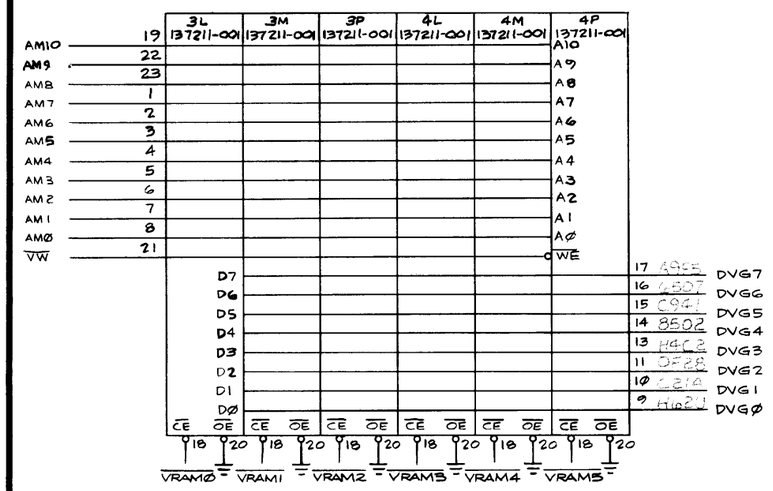

STAR WARS Analog Vector-Generator PCB

ATARI®

A Warner Communications Company

© ATARI INC. 1983

SP-225 Sheet 12A
2nd printing

Op Code and Intensity Latches

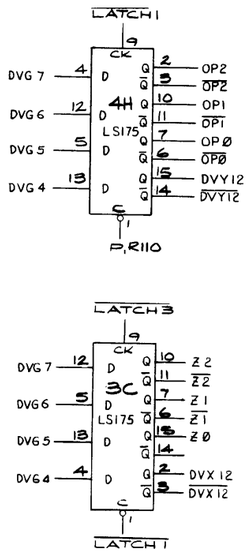

Address Controller

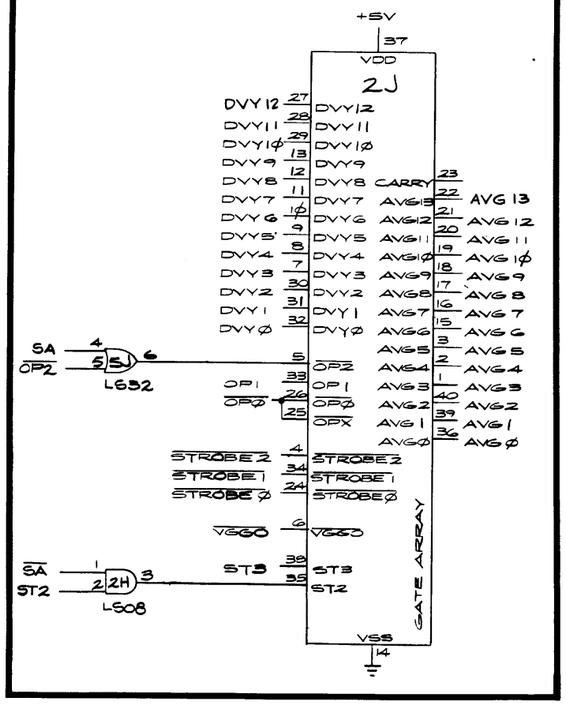

Vector Data Shifters

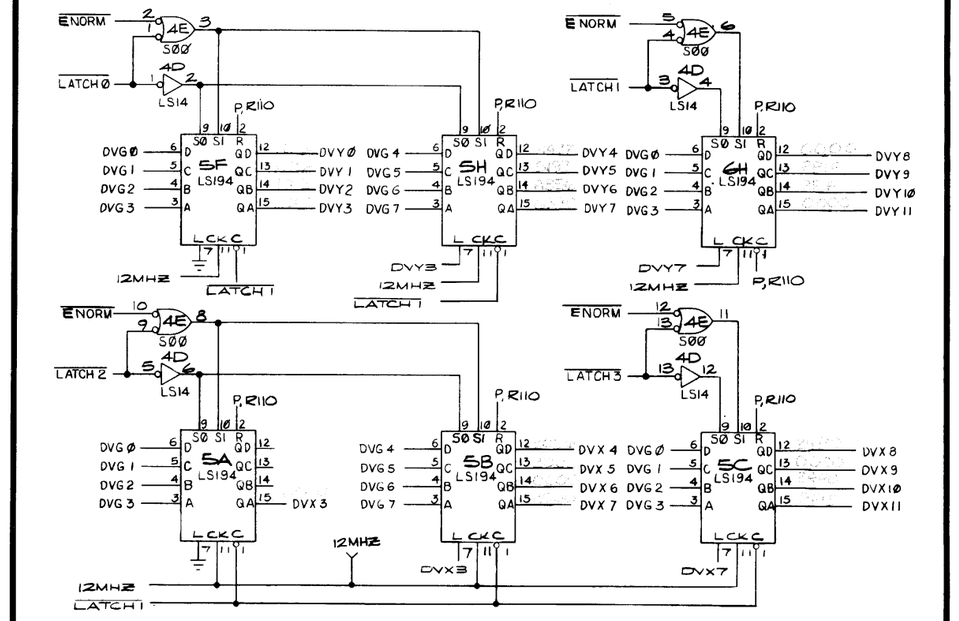

STAR WARS Analog Vector-Generator PCB

ATARI®
A Warner Communications Company

© ATARI INC. 1983

SP-225 Sheet 12B
2nd printing

Normalization Flag

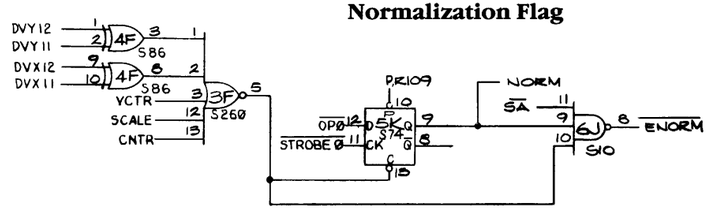

Halt Flag

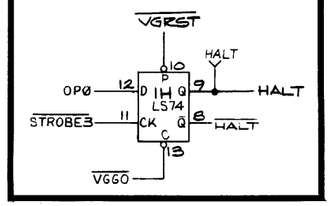

Signature Analysis

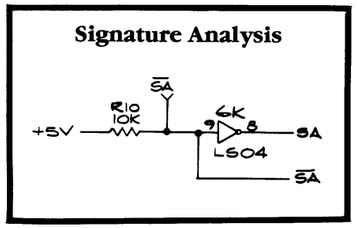

State Machine Clock

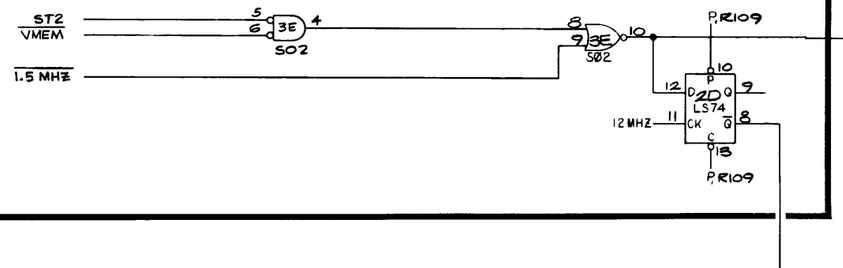

Decoder Disable

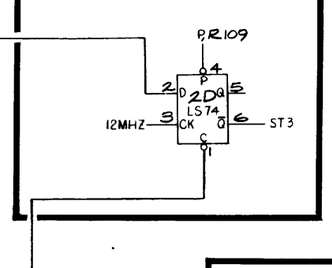

Vector Flag

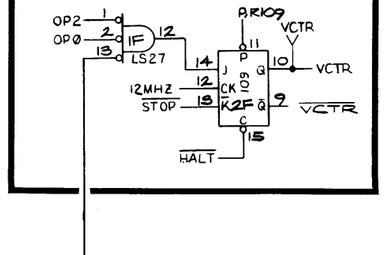

Go Flag

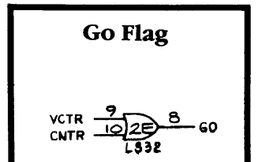

State Machine

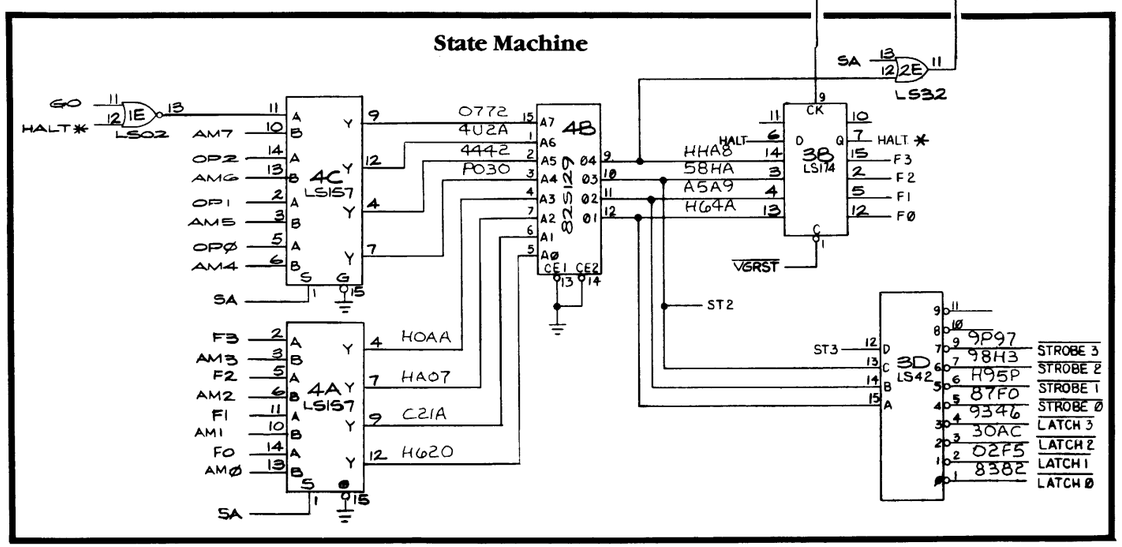

Center Flag

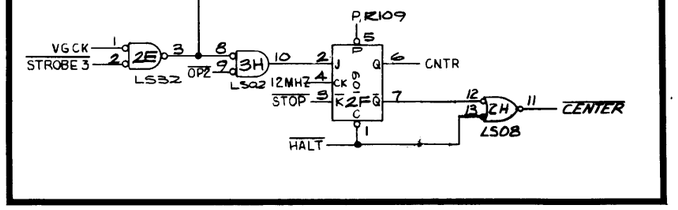

STAR WARS Analog Vector-Generator PCB

ATARI®

A Warner Communications Company

© ATARI INC. 1983

SP-225 Sheet 13A
2nd printing

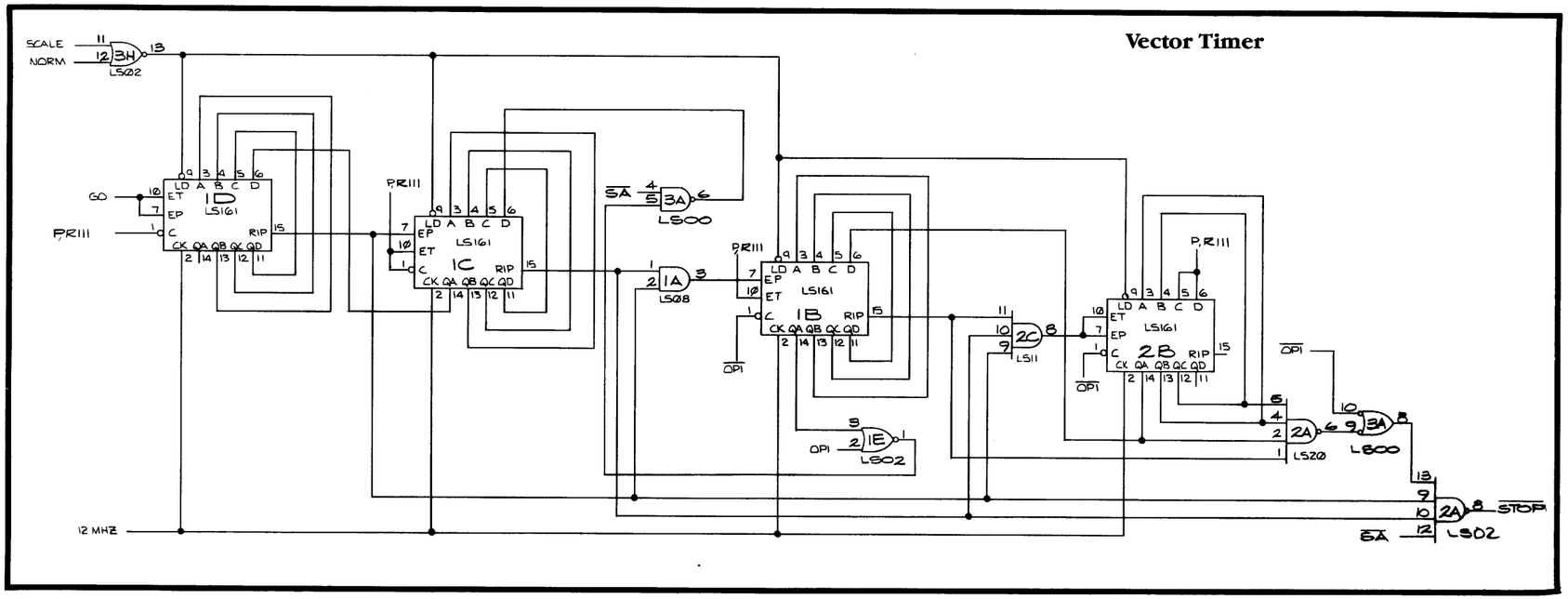

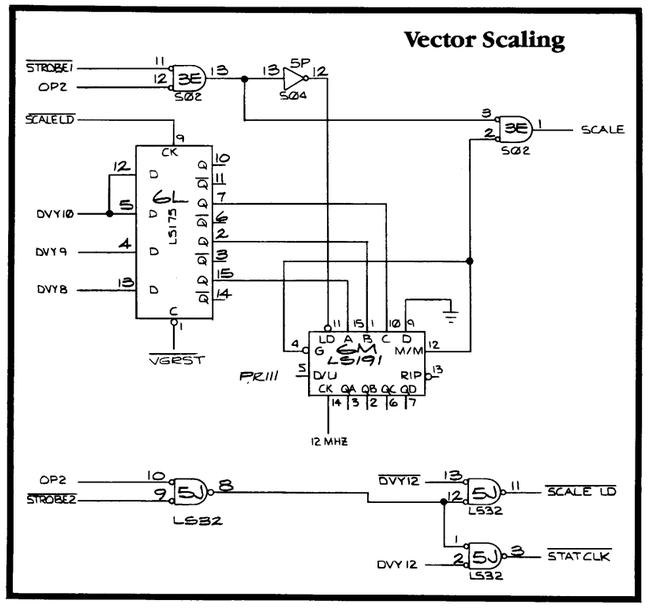

STAR WARS Analog Vector-Generator PCB

ATARI®

A Warner Communications Company

© ATARI INC. 1983

SP-225 Sheet 13B
2nd printing

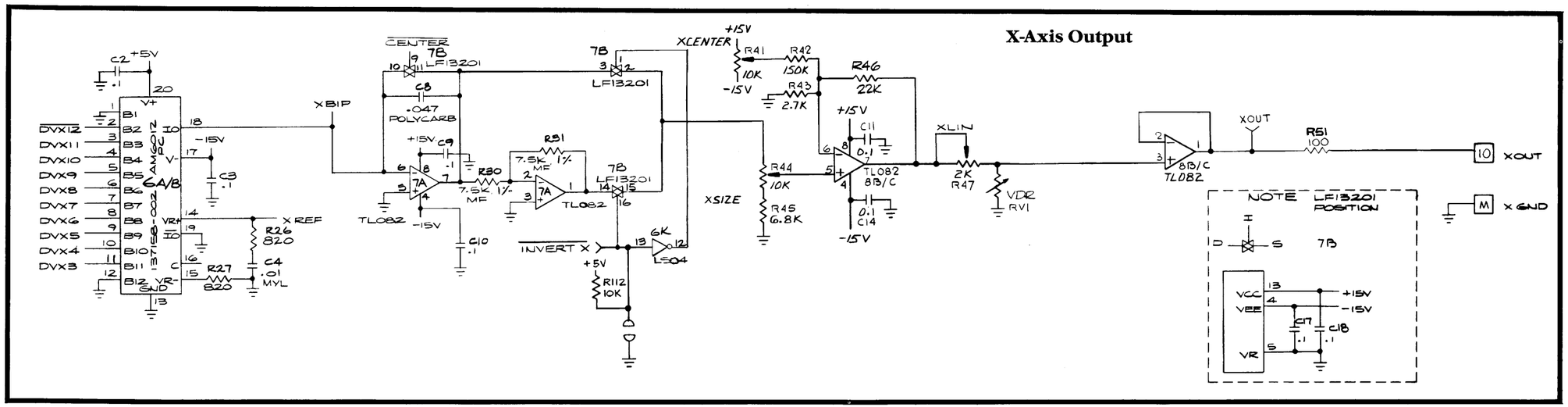

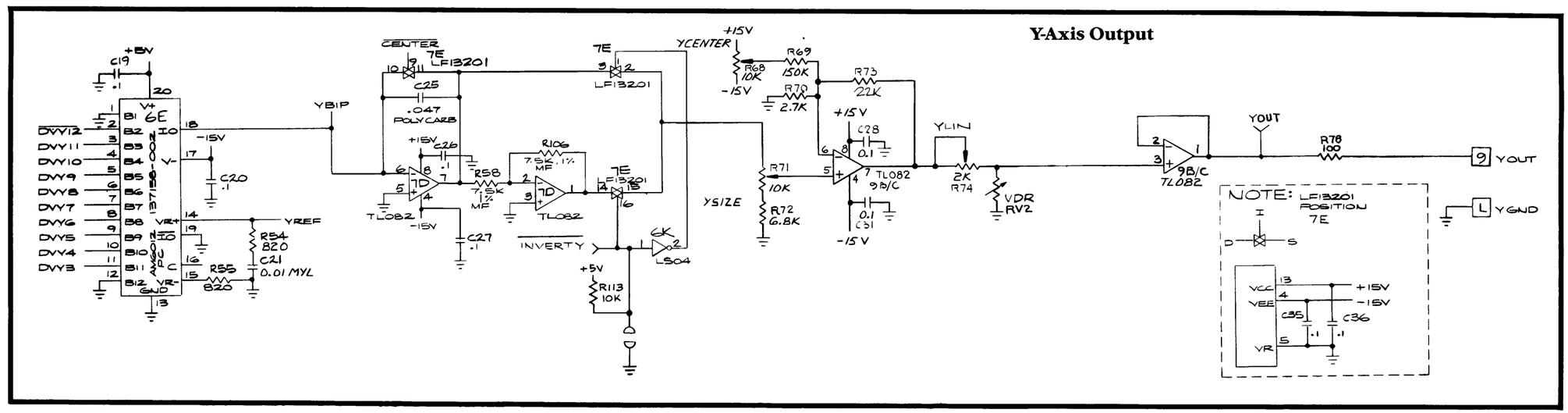

X and Y Video Adjustments

Perform the following procedure to adjust the display size, centering, and linearity:

1. Set the game to the Self-Test Mode and select the Crosshatch Pattern Display as described in Chapter 2 of the game manual.
2. Adjust XCENTER (R41) and YCENTER (R68) so that the crosshatch pattern is centered on the screen.
3. Adjust XSIZE (R44) and YSIZE (R71) so that the crosshatch pattern covers the entire visible screen area.
4. Adjust XLIN (R47) and YLIN (R74) so that the diagonal lines are straight and the diamond-shaped squares are symmetrical. Since the linearity potentiometers change the size of the display, it may be necessary to repeat step 3 to obtain the correct display.

STAR WARS Analog Vector-Generator PCB

ATARI®
A Warner Communications Company

© ATARI INC. 1983

SP-225 Sheet 14A
2nd printing

R-G-B Output

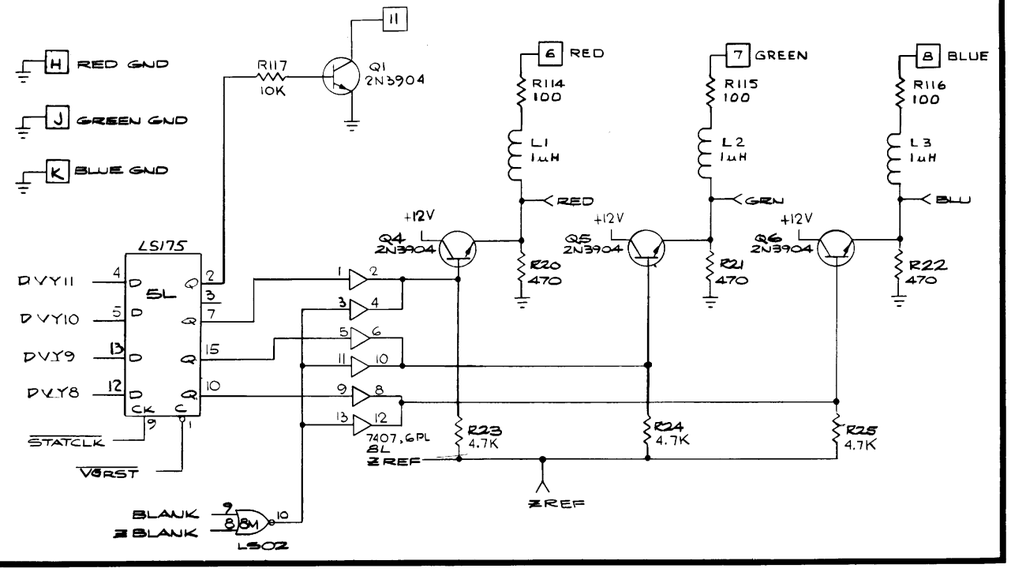

DAC Reference and Bipolar Current Sources

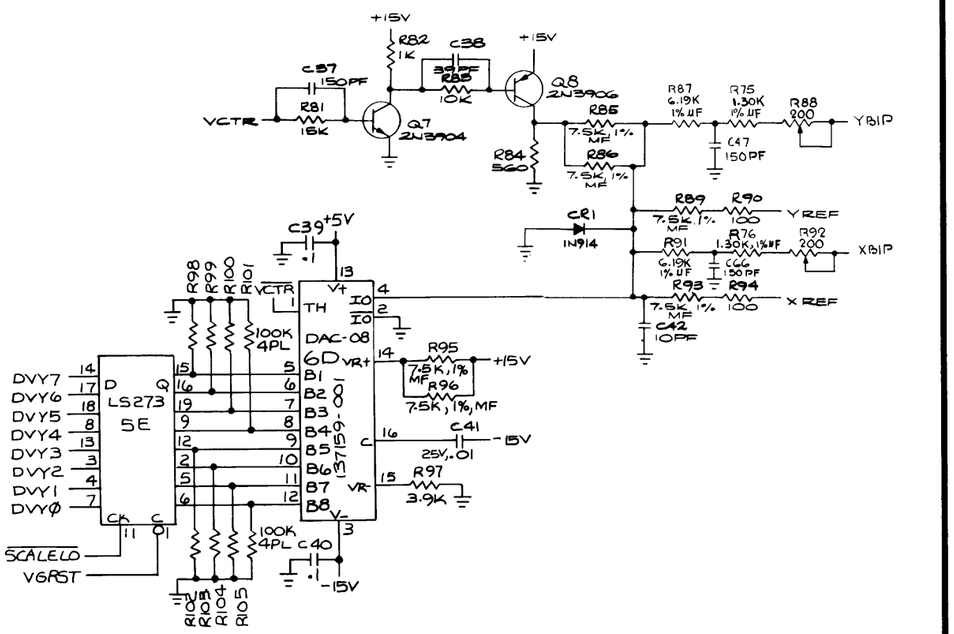

Bipolar Offset Adjustments

Perform the following procedure to adjust the bipolar offset current:

1. Set the game to the Self-Test Mode and select the Bipolar Offset Test Display as described in Chapter 2 of the game manual.
2. Adjust XBIP (R92) and YBIP (R88) so that the displayed-box line width is ⅛-inch or less.

Z-Intensity and Blanking

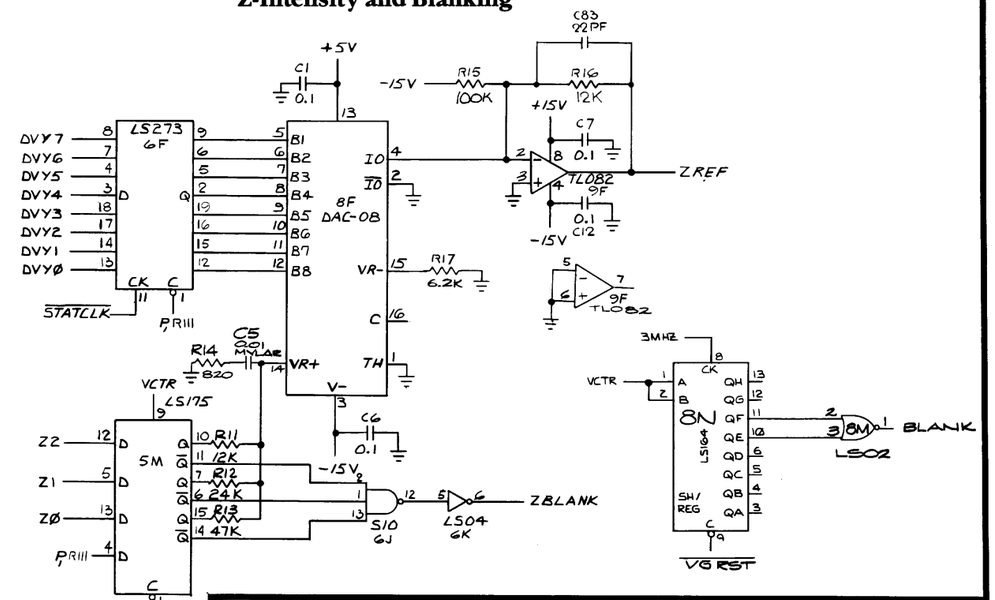

STAR WARS Analog Vector-Generator PCB

ATARI®
A Warner Communications Company

© ATARI INC. 1983

SP-225 Sheet 14B
2nd printing

Reset Pulse Extender

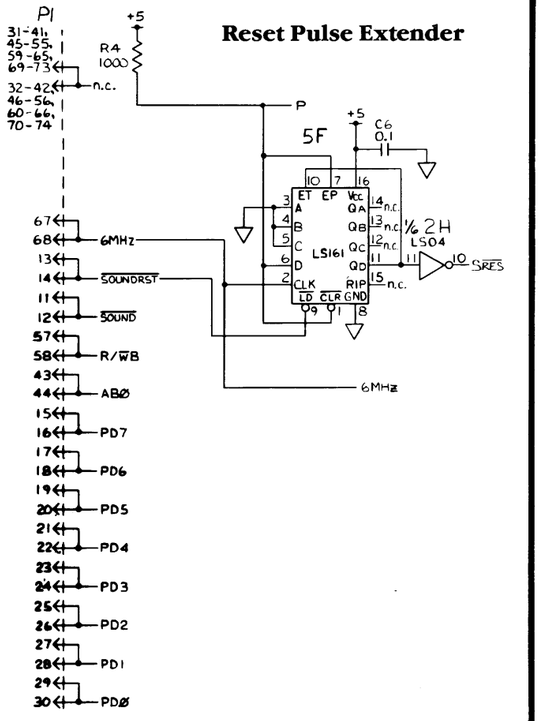

Interface Address Decoder

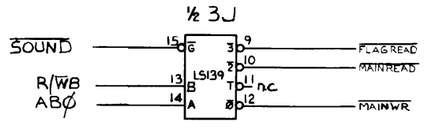

Parallel Interface with Full Handshaking

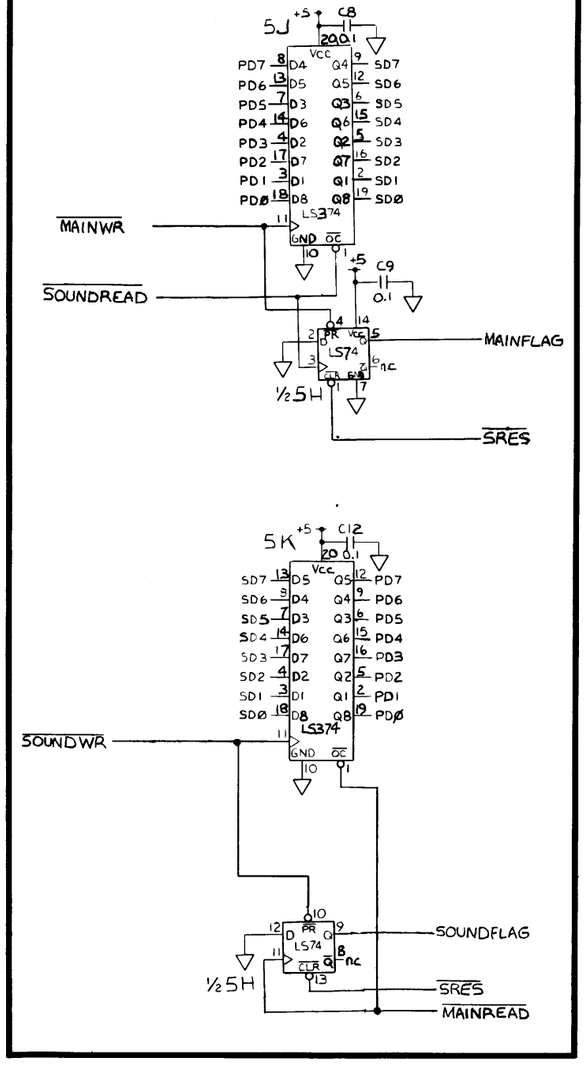

Microprocessor

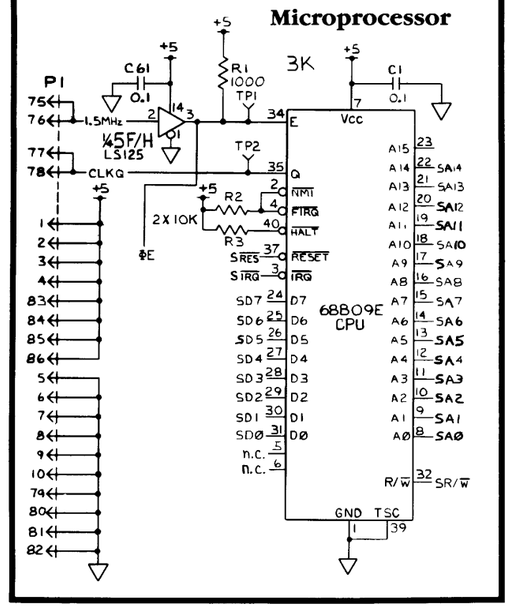

Interface Flag Reader

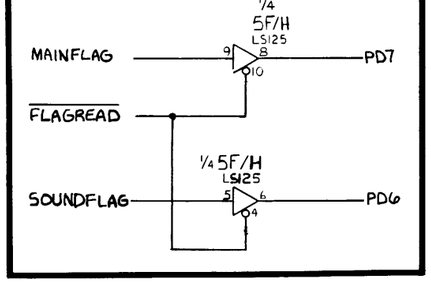

STAR WARS Sound PCB

ATARI®
A Warner Communications Company

© ATARI INC. 1983

SP-225 Sheet 15A
2nd printing

Address Decoders

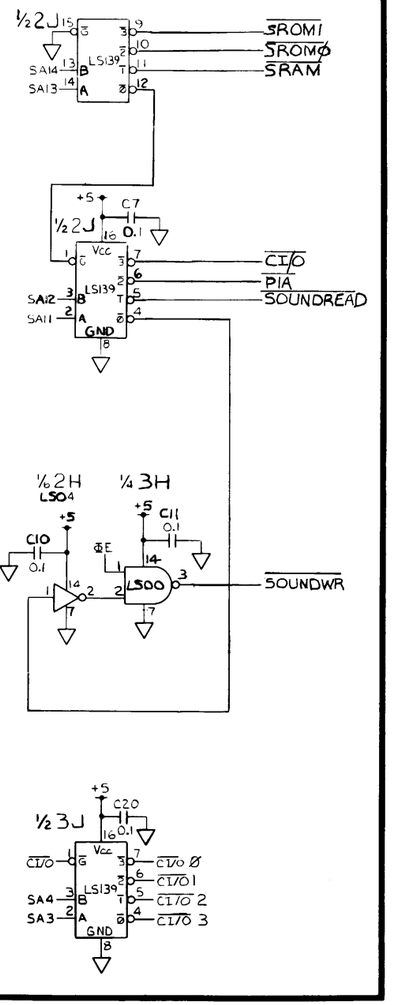

Sound ROM

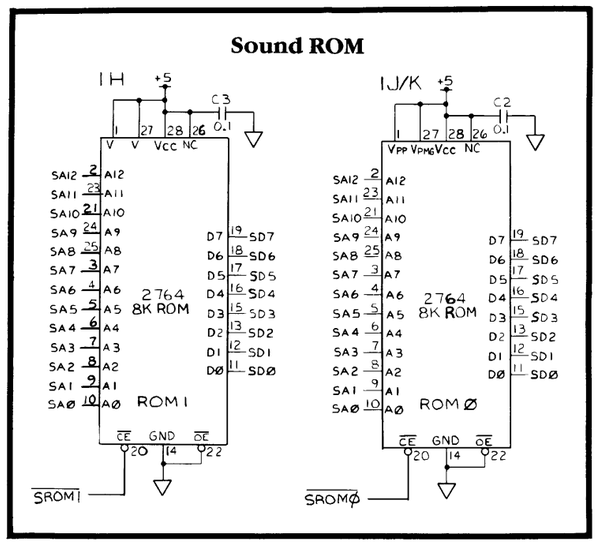

Peripheral Interface Adapter

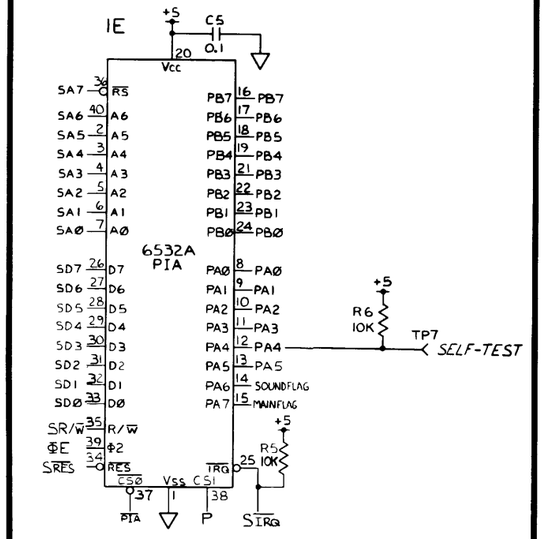

Sound RAM

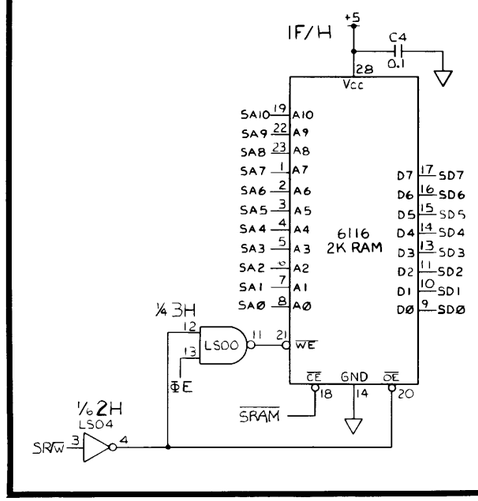

STAR WARS Sound PCB

ATARI®

A Warner Communications Company

© ATARI INC. 1983

SP-225 Sheet 15B
2nd printing

Music and Sound Effects Generators

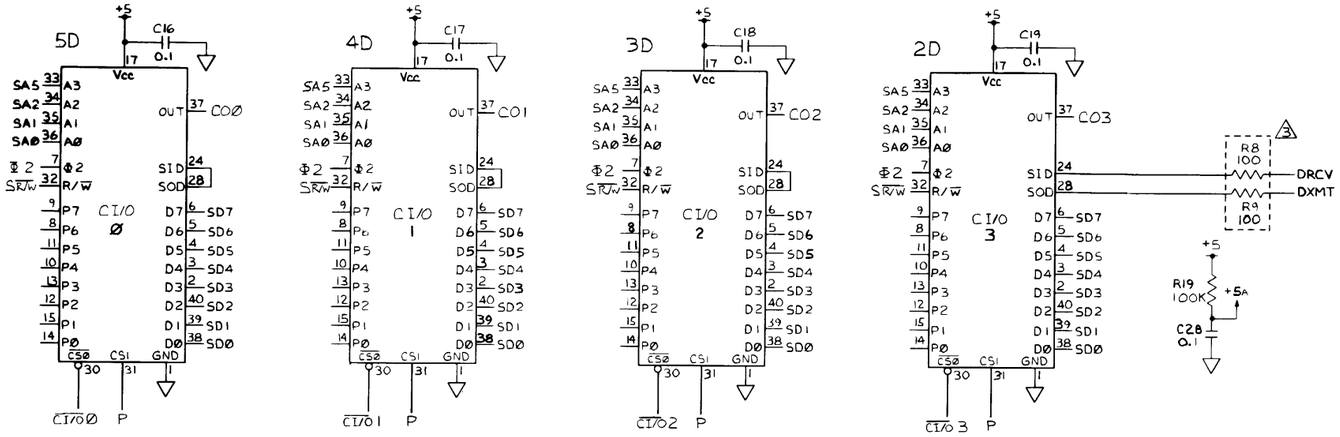

Buffers

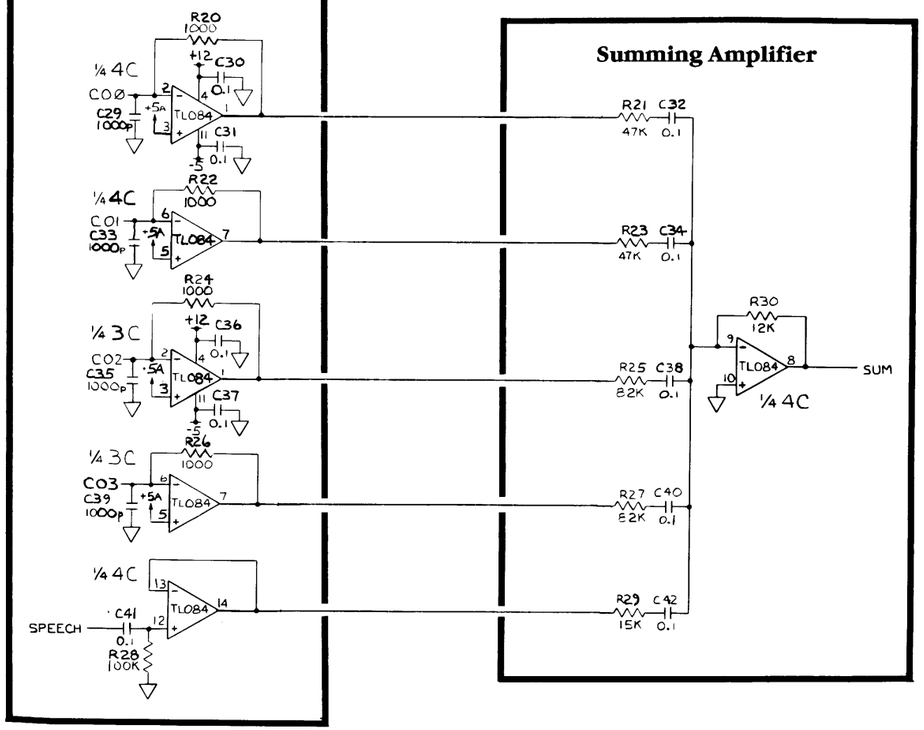

Summing Amplifier

Speech Synthesizer

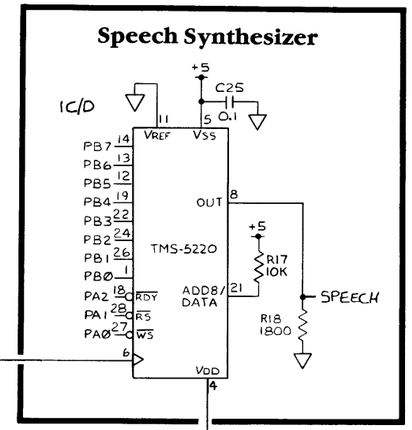

Speech Synthesizer Clock Generator

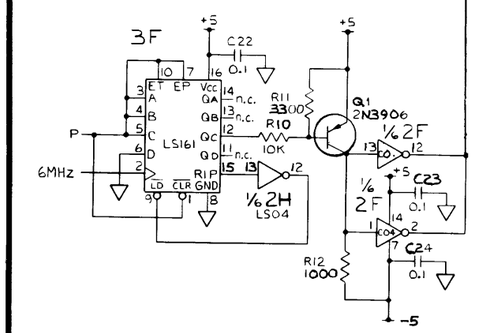

Speech Synthesizer Power Switch

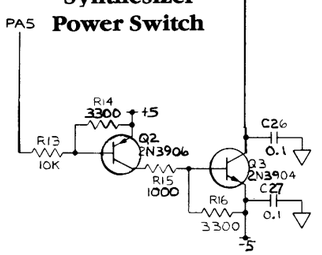

STAR WARS Sound PCB

ATARI®
A Warner Communications Company

© ATARI INC. 1983

SP-225 Sheet 16A
2nd printing

Filter

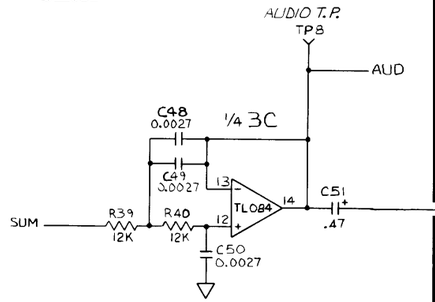

Delay

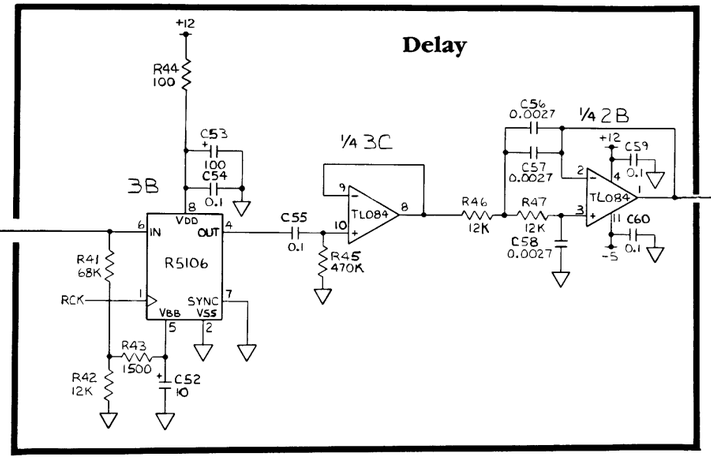

Output and Summing Amplifiers

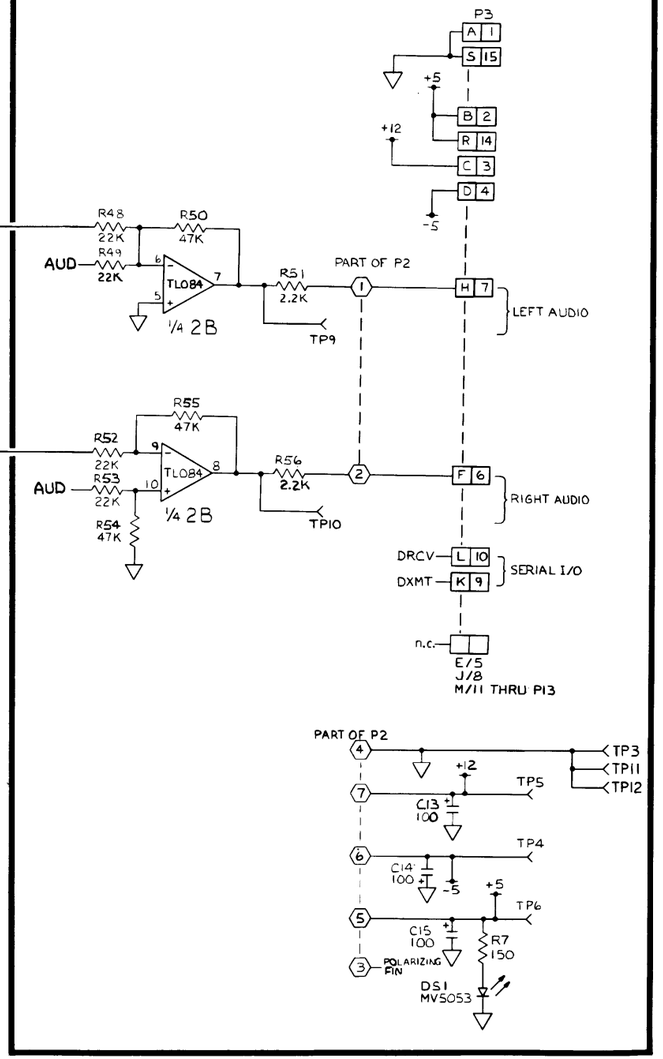

Delay Clock

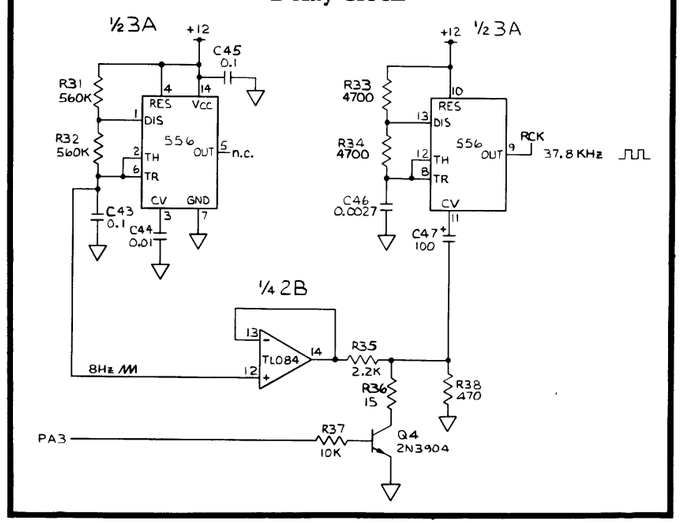

STAR WARS Sound PCB

ATARI®

A Warner Communications Company

© ATARI INC. 1983

SP-225 Sheet 16B
2nd printing

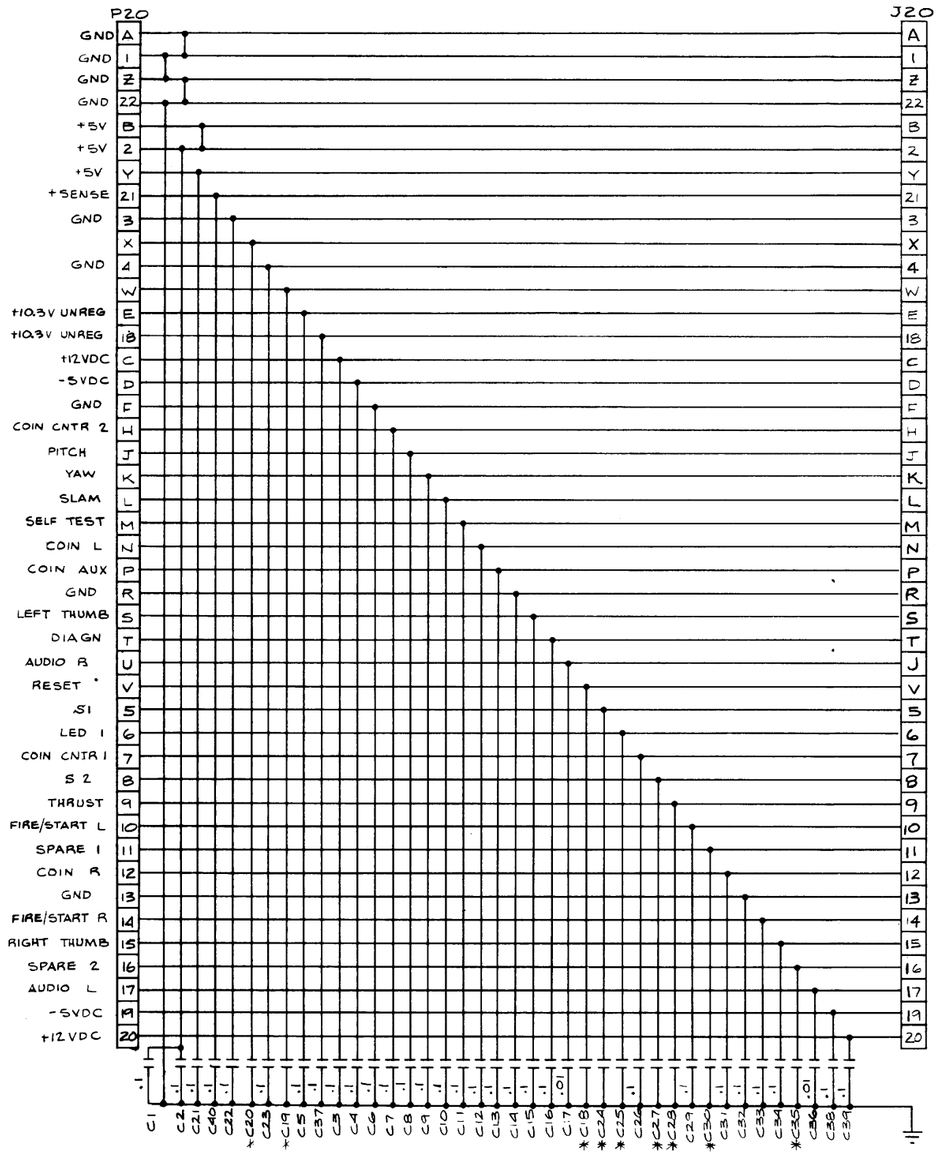

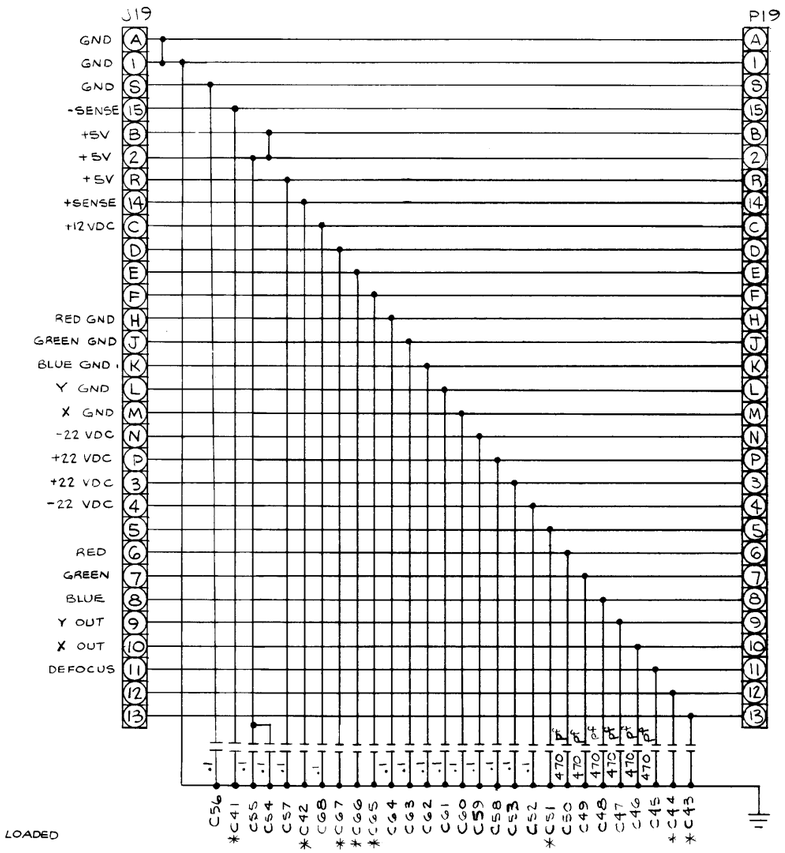

NOTE:
1. ✱ = NOT LOADED

STAR WARS EMI Shield PCB

ATARI®
A Warner Communications Company

© ATARI INC. 1983

SP-225 Sheet 17A
2nd printing

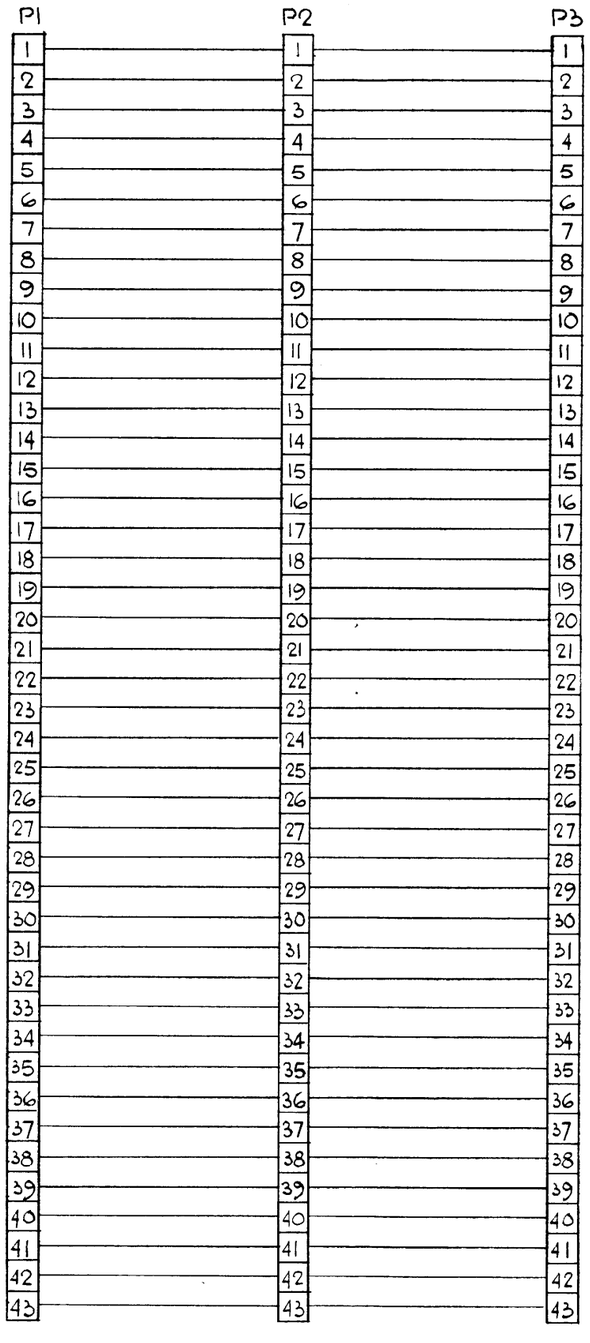

STAR WARS Interconnect PCB

ATARI®

A Warner Communications Company

© ATARI INC. 1983

SP-225 Sheet 17B
2nd printing